A TENANT IMPROVEMENT PROJECT

# YOUR PIE®

PROMINENCE SHOPS AT LIBERTY PARK
8000 LIBERTY PARKWAY
VESTAVIA HILLS, ALABAMA 35242

## SHEET INDEX


| | |
|---|---|
| T1.0 | TITLE SHEET |
| GENERAL | |
| G0.1 | LIFE SAFETY PLAN |
| ARCHITECTURAL | |
| A0.1 | SPECIFICATIONS |
| A1.0 | FLOOR PLAN |
| A1.1 | FINISH PLAN |
| A1.2 | REFLECTED CEILING PLAN |
| A2.0 | FINISH SCHED - RR DETAILS |
| A2.1 | DOOR/WIN SCHED. & DETAILS |
| A3.0 | INTERIOR ELEVATIONS |
| A3.1 | INTERIOR ELEVATIONS |
| A4.0 | MILLWORK DETAILS |
| A4.1 | FIRESTOP: UL INFO. |
| EQ1.0 | EQUIP. & FURNITURE PLAN |
| MECHANICAL/PLUMBNG | |
| MP0.1 | MECHANICAL SPECFICATIONS |
| MECHANICAL | |
| M0.1 | MECHANICAL SCHEDULES |
| M1.0 | MECHANICAL FLOOR PLAN |
| M1.1 | MECHANICAL ROOF PLAN |
| PLUMBING | |
| P1.0 | PLUMBING WASTE PLAN |
| P1.1 | DOMESTIC WATER PLAN |
| P2.0 | PLUMBING SCHEDULES |
| ELECTRICAL | |
| E0.1 | NOTES & LEGENDS |
| E1.0 | LIGHTING FLOOR PLAN |
| E2.0 | POWER FLOOR PLAN |
| E3.0 | MECHANICAL FLOOR PLAN |
| E4.0 | SCHEDULES AND ONE-LINE |



THE CONTENTS OF THIS DRAWING WILL REMAIN THE PROPERTY OF THOMAS F. TEDROW, AIA. IT'S CONTENTS INCLUDING ALL INFORMATION, SHALL NOT BE REPRODUCED USING ANY MEANS WITHOUT EXPRESSED WRITTEN CONSENT AND/OR PERMISSION FROM THOMAS F. TEDROW, AIA


STATE OF ALABAMA · THOMAS F. TEDROW · 8290 · REGISTERED ARCHITECT

ARCHITECT/ENGINEER STAMP

## RESPONSIBILITY SCHEDULE

**NOTE:** THE DIVISION SYSTEM OF THE RESPONSIBILITY SCHEDULE DOES NOT CONTROL THE DIVISION OF WORK AMONG TRADES NOR THE EXTENT OF WORK TO BE PERFORMED BY ANY TRADE. THE G.C. IS RESPONSIBLE FOR ALL WORK UNLESS OTHERWISE NOTED IN THE CONSTRUCTION DOCUMENTS. **PROPERTY IS DELIVERED IN "AS IS" CONDTION TO TENANT PER LEASE AGREEMENT.**

| ITEM | SUPPLIED BY EQUIP. VENDOR | INSTALLED BY EQUIP. VENDOR | SUPPLIED BY SIGNAGE GRAPHICS VENDOR | INSTALLED BY SIGNAGE GRAPHICS VENDOR | SUPPLIED BY TENANT G.C. | INSTALLED BY TENANT G.C. | SUPPLIED & INSTALLED BY LANDLORD G.C. |
|---|---|---|---|---|---|---|---|
| DIVISION 03 - CONCRETE | | | | | | | |
| CONCRETE FLOOR SLAB COMPLETION (IF REQUIRED) | | | | | | | |
| DIVISION 04 - MASONRY | | | | | | | |
| NOT APPLICABLE | | | | | | | |
| DIVISION 06 - WOOD & PLASTICS | | | | | | | |
| STRUCTURAL FRAMING, MISC. BLOCKING | | | | | ● | ● | |
| FINISH CARPENTRY NOT INCLUDING MILLWORK | | | | | ● | ● | |
| CUSTOM MILLWORK (U.N.O.) | ● | ● | | | | | |
| MILLWORK: ELECTRICAL & BLOCKING REQUIREMENTS | | | | | ● | ● | |
| SHELVING (MILLWORK) | ● | ● | | | | | |
| DIVISION 07 - THERMAL & MOISTURE PROTECTION | | | | | | | |
| INSULATION: BATT, SOUND BATT | | | | | ● | ● | |
| FIRE PROTECTION | | | | | ● | ● | |
| DIVISION 08 - DOORS & WINDOWS | | | | | | | |
| WOOD DOORS/ WINDOWS | | | | | ● | ● | |
| ALUMINUM DOORS/ WINDOWS | | | | | ● | ● | |
| HOLLOW METAL DOORS (IF REQUIRED) | | | | | | | |
| SPECIALTY DOORS WITHIN DEMISED AREA | | | | | ● | ● | |
| DIVISION 09 - FINISHES | | | | | | | |
| GYPSUM BOARD, CEILING, WALLS, ETC, AND REQUIRED FRAMING /BLOCKING | | | | | ● | ● | |
| DIVISION 10 - SPECIALTIES | | | | | | | |
| SIGNS (U.N.O.) | | | ● | ● | | | |
| GRAPHICS (P.O.S.) | | | ● | | | ● | |
| DIVISION 11 - EQUIPMENT | | | | | | | |
| KITCHEN EQUIPMENT | ● | ● | | | | | |
| METAL SHELVING (WALL MTD.) | ● | ● | | | | | |
| DIVISION 12 - FURNISHINGS | ● | | | | | ● | |
| DIVISION 21 - FIRE SUPPRESSION | | | | | | | |
| FIRE SPRINKLER SYSTEM (EXISTING & NEW WORK) | | | | | ● | ● | |
| FIRE, SMOKE, CARBON DIOXIDE, CARBON MONOXIDE ALARM SYSTEM | | | | | ● | ● | |
| DIVISION 22 - PLUMBING | | | | | | | |
| PLUMBING EQUIPMENT, FIXTURES WITHIN DEMISING AREA | | | | | ● | ● | |
| DOMESTIC WATER WITHIN DEMISING AREA | | | | | ● | ● | |
| DOMESTIC WATER STUB INS (EXISTING) | | | | | | | ● |
| SEWER STUB UP AND VENTS (EXISTING) | | | | | | | ● |
| DRAINS, FLOOR SINKS | | | | | ● | ● | |
| UNDERGROUND PLUMBING | | | | | ● | ● | |
| GREASETRAP (IF REQUIRED) | | | | | ● | ● | |
| DIVISION 23 - HEATING, VENTILATION, AND HVAC | | | | | | | |
| HVAC WORK | | | | | ● | ● | |
| GAS STUB INS (EXISTING) | | | | | | | ● |
| DIVISION 26 - ELECTRICAL | | | | | | | |
| DATA & PHONE CONDUIT, BOX, AND PULL STRING | | | | | ● | ● | |
| DATA & PHONE CABLING AND HOOKUP | | | | | ● | ● | |
| LIGHT FIXTURES (WITH LAMPS) | | | | | ● | ● | |
| EXIT LIGHTS, EMERGENCY LIGHTS, ETC. | | | | | ● | ● | |
| INTERIOR SIGNS (ELECTRICAL REQUIREMENTS) | | | | | ● | ● | |
| EXTERIOR SIGNS (ELECTRICAL REQUIREMENTS) | | | | | ● | ● | |
| PANEL AND BREAKERS | | | | | ● | ● | |
| ELECTRICAL OUTLETS | | | | | ● | ● | |
| STEP TRANSFORMER (IF REQUIRED) | | | | | ● | ● | |

**NOTE:** SEE "EXHIBIT C: LANDLORD'S WORK EXHIBIT" (FROM LEASE AGREEMENT) ON SHT. A0.1 FOR FURTHER DETAILED SCOPING RESPONSIBILITY.

## PROJECT/CODE SUMMARY

CODE DATA:

| | |
|---|---|
| BUILDING | 2015 INTERNATIONAL BUILDING CODE W/ TECHNICAL CODE OF BIRMINGHAM AMENDMENTS(2015) |
| PLUMBING: | 2015 INTERNATIONAL PLUMBING CODE |
| MECHANICAL: | 2015 INTERNATIONAL MECHANICAL CODE |
| FIRE: | 2015 INTERNATIONAL FIRE CODE W/ TECHNICAL CODE OF BIRMINGHAM AMENDMENTS(2015) |
| ELECTRICAL: | 2015 INTERNATIONAL ELECTRICAL CODE |
| ACCESSIBILITY CODE: | ADAAG-2010 / ANSI 117.1-2009 |
| ENERGY CODE: | ASHRAE 90.1 - 2013 (THE ALABAMA ENERGY CODE - 2015) |

PROJECT SUMMARY DATA:
OCCUPANCY: A-2

CONSTRUCTION TYPE: TYPE IIB, SPRINKLERED

EGRESS DATA:
TOTAL FLOOR AREA: 2500 SF

OCCUPANT LOAD :
DINING AREA: 1092 SF
LESS CONCENTRATED W/OUT FIXED SEATING: 840 SF/ 15 = 56
BOOTH / BENCH SEATING: (248 S.F.) 52 LINEAR FEET / 2 = 25

OPEN KITCHEN: 430 SQ. FT. / 200 = 2
B.O.H. KITCHEN: 500 SQ. FT. / 200 = 2
COOLER/FREEZER: 90 SQ. FT. / 200 = SIMULTANEOUS USE / NON HABITABLE
OTHER (HALLS/RESTROOM): 194 SQ. FT. SIMULTANEOUS USE

TOTAL OCCUPANT LOAD: 85

TOTAL EXITS REQUIRED: 2
TOTAL EXITS PROVIDED: 3

## ABBREVIATIONS

| | | | | | |
|---|---|---|---|---|---|
| AFF | ABOVE FINISH FLOOR | | | | |
| ATC | ACOUSTIC TILE CEILING | GALV | GALVANIZED | RAD | RADIUS |
| A/C | AIR CONDITIONING | GC | GENERAL CONTRACTOR | REF | REFERENCE |
| ALUM | ALUMINUM | GB | GRAB BAR | RET | RETURN |
| | | GPF | GALLONS PER FLUSH | RA | RETURN AIR |
| BD | BOARD | GWB | GYPSUM WALL BOARD | RM | ROOM |
| BO | BOTTOM OF | | | | |
| BLDG | BUILDING | HDW | HARDWARE | STR | STRUCTURAL |
| | | HTG | HEATING | SU | STUB UP |
| CLG | CEILING | HVAC | HEATING/VENTILATION/ AIR CONDITIONING | SUP | SUPPLY |
| CM | CEILING MOUNTED | | | SA | SUPPLY AIR |
| CT | CERAMIC TILE | HT | HEIGHT | SCH | SCHEDULE |
| CO | CLEAN OUT | HM | HOLLOW METAL | SEC | SECTION |
| CW | COLD WATER | HORZ | HORIZONTAL | SEL | SELECT |
| COL | COLUMN | HW | HOT WATER | SHT | SHEET |
| CONC | CONCRETE | | | SIM | SIMILAR |
| CMU | CONCRETE MASONRY UNIT | IN | INCH | SCW | SOLID CORE WOOD |
| | | ID | INDIRECT DRAIN | SPK | SPEAKER |
| DC | DATA/TELEPHONE CONTRACTOR | JT | JOINT | SPEC | SPECIFICATIONS |
| | | | | SQ | SQUARE |
| DET | DETAIL | LAM | LAMINATE (ED) | STD | STANDARD |
| DIM | DIMENSION | LV | LAVATORY | STL | STEEL |
| DD | DIRECT DRAIN | | | ST | STORAGE |
| DR | DOOR | MAT'L | MATERIAL | | |
| DB | DRAIN BOARDS | MC | MECHANICAL CONTRACTOR | TEL | TELEPHONE |
| DWG | DRAWING | | | THK | THICK (NESS) |
| | | MECH | MECHANICAL | TL | TILE |
| EA | EACH | MFR | MANUFACTURE (ER) | TO | TOP OF |
| EC | ELECTRICAL CONTRACTOR | MIN | MINIMUM | TOS | TOP OF SLAB |
| | | MR | MIRROR | TYP | TYPICAL |
| ELEC | ELECTRICAL | MISC | MISCELLANEOUS | | |
| EL | ELEVATION | | | UNO | UNLESS NOTED OTHERWISE |
| EQ | EQUAL | NIC | NOT IN CONTRACT | | |
| EXG | EXISTING | NTS | NOT TO SCALE | | |
| EXP | EXPANSION | NO | NUMBER | UR | URINAL |
| EXT | EXTERIOR | | | | |
| | | OC | ON CENTER | VIF | VERIFY IN FIELD |
| FOF | FACE OF FINISH | OP | OPENING | VT | VENT |
| FOS | FACE OF STUDS | | | VTR | VENT THRU ROOF |
| FT | FEET | PC | PLUMBING CONTRACTOR | VERT | VERTICAL |
| FRP | FIBERGLASS REINFORCED PLASTIC | PNL | PANEL | VB | VINYL BASE |
| | | PR | PAIR | | |
| FIN | FINISH | PLAM | PLASTIC LAMINATE | WC | WATER CLOSET |
| FLR | FLOOR | PWD | PLYWOOD | WP | WATERPROOF |
| FD | FLOOR DRAIN | | | W | WIDTH |
| FS | FLOOR SINK | QTY | QUANTITY | WIN | WINDOW |
| | | | | W/ | WITH |
| | | | | W/O | WITHOUT |
| | | | | WD | WOOD |

TOM F. TEDROW, ARCHITECT OF RECORD, IS NOT RESPONSIBLE FOR INTERPRETING THE INTENT OF THE CONSTRUCTION DOCUMENTS, INCLUDING MAKING MODIFICATIONS AS MAY BE NECESSARY DURING THE CONSTRUCTION PHASE. THE ARCHITECT OF RECORD IS NO LONGER LIABLE FOR WORK WHERE CHANGES TO THESE DOCUMENTS HAVE BEEN MADE.

## REFERENCE SYMBOLS

DRAWING TITLE — 1 / A101 — View Name 1/8" = 1'-0"

VERTICAL ELEVATION — 1 / A101 — SIM

DETAIL CALLOUT

SECTION — 1 / A101 — SIM

ROOM NAME/ NUMBER

REVISION CLOUD/ SYMBOL — 1

PARTITION TYPE — 1

DOOR NUMBER — 100

WINDOW TYPE DESIGNATE W/ LETTER — A

KEYNOTE DESIGNATE W/ NUMBER — 1

EQUIPMENT TAG

MILLWORK TAG — C1

## VICINITY MAP

★ INDICATES SITE LOCATION

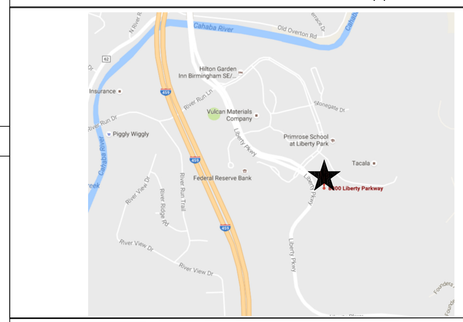


## SITE MAP

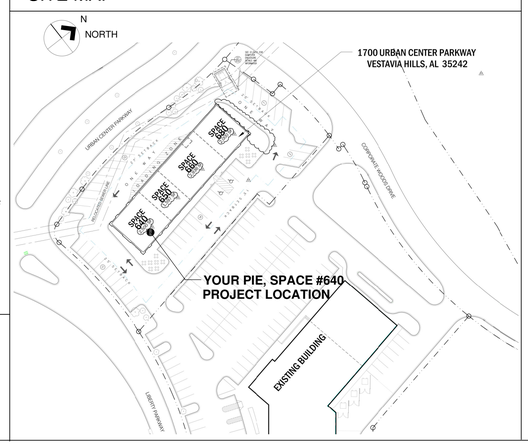


## PROJECT DIRECTORY

TENANT:
LLOYED PEEPLES
YP-HOMEWOOD, LLC.
7309 KINGS MOUNTAIN PLACE
VESTAVIA, AL 35242
TEL: 205-249-4334
EMAIL: Boyd.yourpie@gmail.com

TENANT PROJECT ARCHITECT:
THOMAS F. TEDROW, AIA
2866 ADAMS BROOK WAY
SNELLVILLE,GA 30078
PHONE: 678.777.9548
FAX: 770.972.0660
EMAIL: TOM.TEDROW@TEDROWDESIGN.COM

MEP CONTACT:
JUSTIN HARDY
PHONE:678.234.8156
EMAIL: JUSTINENGINEER@GMAIL.COM

PROJECT DESIGNER:
KACIE R. REISMAN, LEED AP ID+C, RID
OFFICE: 678.765.8005
CELL: 678.458.4549
EMAIL: KACIE.REISMAN@TEDROWDESIGN.COM

CORPORATE YOUR PIE PROJECT MANAGER:
DREW FRENCH
1021 BAXTER STREET, ATHENS, GA 30606
O-706-850-5304
C-770-883-9262

NOTE:
ALL POTENTIAL BIDDERS TO CONTACT THE TENANT REGARDING THE BID PROCESS.

BIDDERS WITH PLAN QUESTIONS ONLY, MAY CONTACT ARCHITECT, PROJECT DESIGNER, OR ENGINEERS.

## GENERAL NOTES

1. ALL CONSTRUCTION MUST COMPLY WITH ALL GOVERNING CODES.

2. ADA ISSUES WILL COMPLY TO THE ACCESSIBILITY CODES AS ESTABLISHED BY THE STATE LOCAL CODES.

3. ALL CONTRACTOR AND SUBCONTRACTORS WILL THOROUGHLY FAMILIARIZE THEMSELVES WITH THESE CONSTRUCTION DOCUMENTS AND WILL VERIFY EXISTING SITE AND BUILDING CONDITIONS PRIOR TO SUBMITTING A BID.

4. SUBCONTRACTORS, BEFORE STARTING THEIR WORK WILL CHECK AND VERIFY THEIR PARTICULAR RELATED REQUIREMENTS FOR COMPLIANCE ALONG WITH MEASUREMENTS, SURFACE LEVELS, AND SURFACE CONDITIONS NEAR AND ABOUT THEIR WORK. IT WILL BE CONCLUDED THAT EACH BIDDER UNDERSTANDS AND KNOWS EXACTLY WHAT WILL BE REQUIRED.

5. THIS ARCHITECT AND HIS PROFESSIONAL CONSULTANTS WILL NOT HAVE CONTROL OF AND WILL NOT BE RESPONSIBLE FOR CONSTRUCTION MEANS, METHODS, SEQUENCES, OR FOR SAFETY PRECAUTIONS IN CONNECTION WITH THE WORK ON THIS PROJECT OR FOR THE ACTS OR OMISSIONS OF THE CONTRACTOR, SUBCONTRACTOR, OR ANY OTHER PERSONS PERFORMING ANY OF THE WORK ON THIS SITE.

6. ALL CONTRACTORS WILL PROVIDE ADEQUATE BRACING AND OR SHORING TO INSURE STRUCTURAL STABILITY OF THE BUILDING AND ALL RELATED BUILDING COMPONENTS, I.E. STRUCTURAL WALLS, INTERIOR WALL ASSEMBLIES ETC. DURING THE CONSTRUCTION PHASE OF THIS PROJECT.

7. ALL WORK WILL BE COORDINATED WITH OTHER TRADES IN ORDER TO AVOID INTERFERENCE AND PRESERVE MAXIMUM HEADROOM AND AVOID OMISSIONS. EACH CONTRACTOR WILL INCLUDE ALL MISCELLANEOUS ITEMS REQUIRED BY CODE AND NEEDED TO COMPLETE THIS WORK.

8. ALL MATERIALS USED WILL BE NEW AND BEAR U.I. LABELS WHERE REQUIRED AND MEET APPROPRIATE N.E.M.A. STANDARDS.

9. LAYOUT ALL PARTITIONS BEFORE BEGINNING CONSTRUCTION TO PREVENT ERRORS BY DISCREPANCY, ALL DRYWALL PARTITIONS WILL BE INSTALLED AS NOTED ON THE DRAWINGS. DO NOT SCALE DRAWINGS.

10. VERIFY ALL DIMENSIONS IN THE FIELD PRIOR TO ORDERING CUTTING AND/OR INSTALLING MATERIAL, PRODUCT OR EQUIPMENT. IN THE EVENT OF ANY DISCREPANCIES, CONTACT THE ARCHITECT BEFORE PRECEDING WITH THAT WORK.

11. ALL SUBCONTRACTORS WILL PROVIDE A CERTIFICATE OF INSURANCE TO THE OWNER AND LANDLORD PRIOR TO STARTING ANY WORK ON THIS PROJECT. CERTIFICATE OF INSURANCE CANNOT BE TERMINATED OR CANCELED WITHOUT 10 DAYS PRIOR WRITTEN NOTICE TO THE OWNER.

12. NO SUBSTITUTIONS OF ANY KIND FOR MATERIALS SPECIFIED ON THESE CONSTRUCTION DOCUMENTS IS ALLOWED . NO "EQUIVALENT" SUBSTITUTIONS WILL BE MADE, UNLESS APPROVED IN WRITING BY THE ARCHITECT AND APPROVED BY THE OWNER DUE TO THE LACK OF AVAILABILITY OF ORIGINAL.

13. EACH CONTRACTOR IS RESPONSIBLE FOR FIRST CLASS WORKMANSHIP AND WILL ASSUME ALL RESPONSIBILITY FOR THE CARE AND PROTECTION OF HIS OWN WORK AND MATERIALS FROM DAMAGE. HE WILL MAKE GOOD ANY DAMAGE TO HIS OWN OR OTHER WORK CAUSED BY HIMSELF OR WORKMEN EMPLOYED BY HIM.

14. EACH CONTRACTOR WILL ABIDE BY LOCAL AREA STANDARDS AND RELATED OSHA STANDARDS FOR THE SAFETY OF THEIR EMPLOYEES ON SITE. THIS ARCHITECT AND HIS PROFESSIONAL CONSULTANTS WILL BE HELD HARMLESS BY THE OWNER, G.C. AND RELATED AWARDED TRADES, ON THIS PROJECT FOR ACCIDENTS OF INJURIES CAUSED OR ACCRUED ON THIS PROPERTY DURING THE CONSTRUCTION PHASES OF THIS PROJECT.

15. LIENS: ALL SUBCONTRACTORS AND GENERAL CONTRACTOR WILL DELIVER TO THE LANDLORD A COMPLETE RELEASE OF ALL ITEMS ARISING OUT OF THIS CONTRACT AND/OR RECEIPTS IN FULL LIEU THEREOF TOWARDS THEIR PARTIAL OR FINAL PAYMENT FOR WORK IN PLACE FOR THE OWNER.

16. GENERAL CONTRACTOR TO PAY FOR ALL SCAVENGER SERVICES. AND WILL BE RESPONSIBLE FOR REMOVAL OF DEBRIS ACCUMULATED BY EACH TRADE. HOWEVER, EACH TRADE WILL KEEP THE JOB SITE CLEAN AND SAFE AT ALL TIMES, ALONG WITH A BROOM FINISH AT THE END OF EACH WORKING DAY.

17. CONSTRUCTION CLEAN-UP: AFTER ALL OTHER WORK IS COMPLETED AND JUST PRIOR TO TURNING THE SPACE OVER TO THE OWNER, THE CONSTRUCTION MANAGER WILL EMPLOY THE SERVICES OF A PROFESSIONAL CLEANING SERVICES TO CLEAN AND WASH DOWN ALL INSTALLED EQUIPMENT, SERVICE AREAS, ALONG WITH THE CLEANING OF ALL GLASS WINDOW/DOOR SURFACES PRIOR TO OCCUPANCY.

19. **PROPERTY IS DELIVERED TO TENANT IN"S IS" CONDITION PER LEASE AGREEMENT.**

20. G.C. SHALL PROVIDE AND INSTALL KNOX BOX AS REQUIRED BY TECHNICAL CODE OF BIRMINGHAM AND SHALL SUBMIT SHOP DWG/ SPEC.S AS REQUIRED TO BIRMINGHAM FIRE AND RESCUE SERVICE DEPARTMENT.

21. FIRE SPRINKLER SYSTEM IS EXISTING AND SHALL REMAIN. G.C. SHALL SUBMIT SPRINKLER SHOP DRAWINGS AND SPECIFICATIONS TO BIRMINGHAM FIRE AND RESCUE DEPARTMENT AS REQUIRED FOR PERMITTING.

22. BUILDING AND TENANT AREA FIRE ALARM SYSTEM IS EXISTING AND SHALL REMAIN. EXISTING SYSTEM; SIMPLEX 4100 ES.. G.C. TO SUBMIT SHOP DRAWINGS TO BIRMINGHAM FIRE AND RESCUE DEPARTMENT AS REQUIRED FOR PERMITTING.


THOMAS F. TEDROW, AIA
ARCHITECT
2866 ADAMS BROOK WAY
SNELLVILLE, GA 30078
PH. 678.777.9548
E-MAIL: tom.tedrow@tedrowdesign.com


YOUR PIE
PROMINENCE SHOPS AT LIBERTY PARK
8000 LIBERTY PARKWAY
VESTAVIA HILLS, ALABAMA 35242

| REV. NO. | DATE | DESCRIPTION |
|---|---|---|
| | | |

PROJECT NO: YPAL-07
DRAWN BY: DLM
CHECKED BY: TT
ISSUE DATE: 08-12-16

TITLE SHEET

T1.0

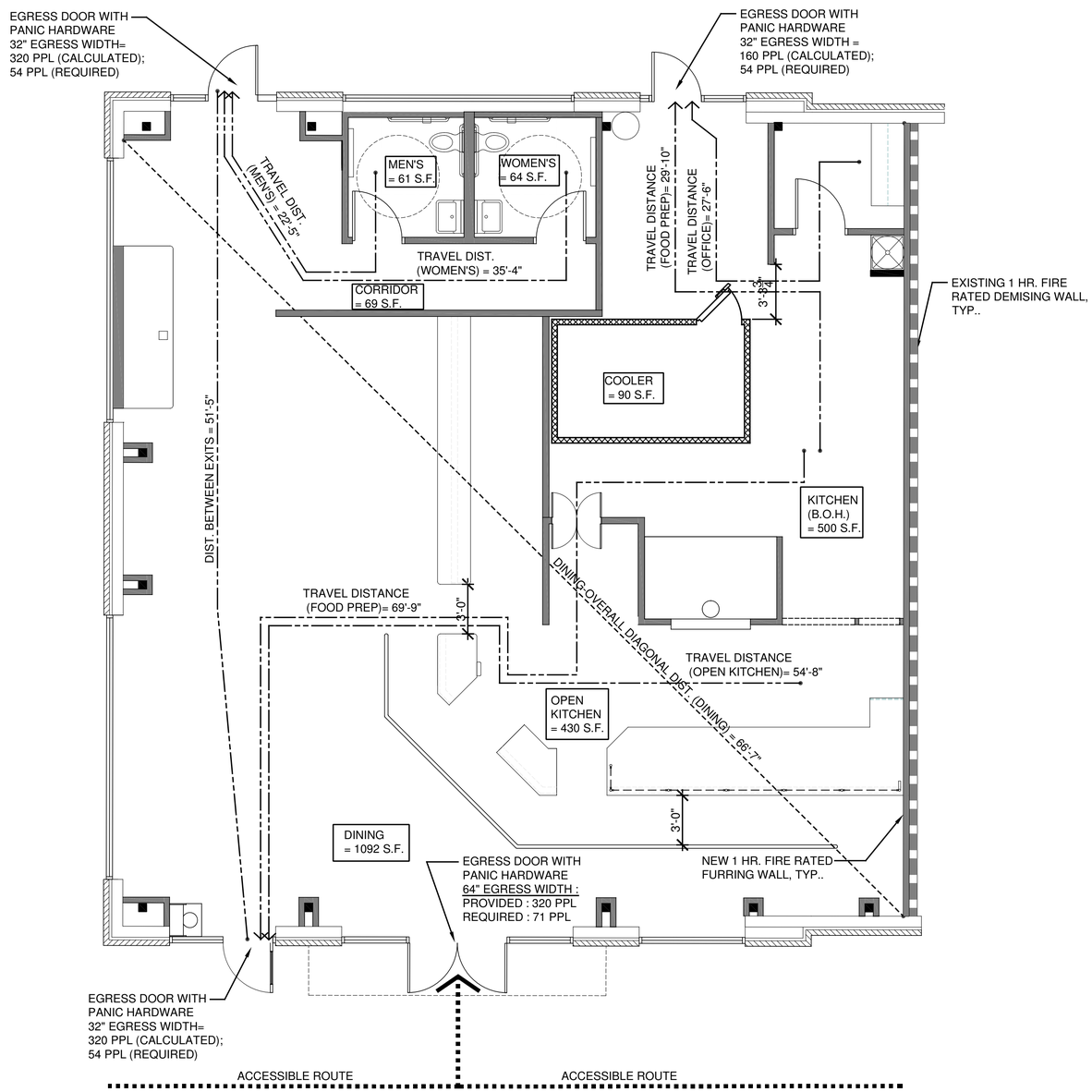


1 G0.1 LIFE SAFETY PLAN
3/16" = 1'-0"

THE CONTENTS OF THIS DRAWING WILL REMAIN THE PROPERTY OF THOMAS F. TEDROW, AIA. IT'S CONTENTS INCLUDING ALL INFORMATION, SHALL NOT BE REPRODUCED USING ANY MEANS WITHOUT EXPRESSED WRITTEN CONSENT AND/OR PERMISSION FROM THOMAS F. TEDROW, AIA

STATE OF ALABAMA
THOMAS F. TEDROW
0260
REGISTERED ARCHITECT

ARCHITECT/ENGINEER STAMP

YOUR PIE

THOMAS F. TEDROW, AIA
ARCHITECT
2998 ADAMS BROOK HWY
SNELLVILLE, GA 30078
PH: 678.777.3548
E-MAIL: tom.tedrow@tedrowdesign.com

YOUR PIE
PROMINENCE SHOPS AT LIBERTY PARK
8000 LIBERTY PARKWAY
VESTAVIA HILLS, ALABAMA 35242

| REV. NO. | DATE | DESCRIPTION |
|---|---|---|
| | | |

PROJECT NO: YPAL-07
DRAWN BY: DLM
CHECKED BY: TT
ISSUE DATE: 08-12-16

CODE REVIEW/ SITE PLAN

G0.1

SECTION 01005: ADMINISTRATIVE PROVISIONS

WORK OF THE CONTRACT INCLUDES THE FURNISHING OF ALL MATERIALS, LABOR, EQUIPMENT, TOOLS, TRANSPORTATION, INSURANCE, SALES TAXES, PERMITS, LICENSES, SUPERINTENDENT AND MISCELLANEOUS SERVICES REQUIRED FOR THE CONSTRUCTION AND COMPLETION OF THE PROJECT AS REQUIRED BY THE PLANS AND SPECIFICATIONS.

CONTRACTOR SHALL PROVIDE AND MAINTAIN ALL FACILITIES FOR TEMPORARY LIGHT AND POWER WITHIN THE CONSTRUCTION AREA DURING THE ENTIRE BUILDING PERIOD.

ALL EXISTING AREAS TO REMAIN AND EXISTING AREAS AFFECTED BY DEMOLITION OR NEW CONSTRUCTION WORK SHOWN ON THE DRAWINGS SHALL BE PATCHED AS REQUIRED TO MATCH IMMEDIATE ADJACENT AREAS IN CONSTRUCTION, MATERIAL, FIRE RATING, FINISH AND COLOR, UNLESS OTHERWISE NOTED.

ALL WORK DONE UNDER THIS CONTRACT SHALL CONFORM TO ALL APPLICABLE CODES, ORDINANCES AND GOVERNMENT REGULATIONS HAVING JURISDICTION OVER THE WORK.

ALL MATERIALS DELIVERED TO THE JOB SITE SHALL BE PROPERLY STORED WITHIN THE LEASE SPACE PREMISES OR A LOCATION DESIGNATED BY BUILDING OWNER. DELIVERY, HANDLING AND STORAGE OF PRODUCTS SHALL BE IN A MANNER TO PREVENT DAMAGE, DETERIORATION, LOSS OR THEFT.

CONTRACTOR SHALL MAINTAIN SITE IN A STATE OF CLEANLINESS THROUGHOUT CONSTRUCTION PERIOD, PROVIDING ADEQUATE TEMPORARY STORAGE FOR WASTE MATERIAL WITHIN THE LEASE SPACE PREMISES OR A LOCATION DESIGNATED BY BUILDING OWNER, OBSERVING REQUIREMENTS FOR SAFETY AND FIRE PROTECTION, AND REMOVAL AND LEGAL DISPOSAL OF WASTE MATERIAL AS OFTEN AS REQUIRED.

UPON SUBSTANTIAL COMPLETION, THE CONTRACTOR SHALL PROVIDE FINAL CLEANING FOR EACH AREA WHICH WILL RESULT IN A LEVEL OF CLEANLINESS GENERALLY PROVIDED BY COMMERCIAL BUILDING AS REQUIRED BY PRODUCT MANUFACTURER. CLEANING SHALL INCLUDE, BUT IS NOT LIMITED TO: GLASS, CARPET, PLASTIC LAMINATE, LIGHT FIXTURES AND REMOVAL OF LABELS (NOT REQUIRED TO BE PERMANENT BY CODE). CONTRACTOR SHALL SCHEDULE FINAL CLEANING SO OWNER MAY OCCUPY COMPLETELY CLEAN PROJECT.

PROTECT ADJACENT AREA AND SURFACES FROM DAMAGE DURING PROGRESS OF THE WORK. PARTITION OFF WORK AREA WITH BARRIER WALL FOR DURATION OF WORK PERIOD. IF PERMITTED BY RETAILER, CLEAR PLASTIC OR VISQUEEN MAY BE USED AS A BARRIER. COSTS OF REPLACEMENT AND/OR CORRECTION OF DAMAGED SURFACES SHALL BE BORNE BY THE SUBCONTRACTOR RESPONSIBLE FOR SAID DAMAGE. PROTECTION OF THE PROJECT FIXTURES AND FINISHES IS THE RESPONSIBILITY OF THE CONTRACTOR. COVER SURFACES AS NECESSARY TO PROTECT AGAINST DAMAGE.

GENERAL CONTRACTOR SHALL MAINTAIN A JOB SUPERINTEDENT ON SITE DURING ENTIRE CONSTRUCTION PHASE AND DURING ALL PERIODS OF WORK.

SECTION 06100: ROUGH AND FINISH CARPENTRY

INTERIOR BLOCKING SHALL BE CONSTRUCTION GRADE PINE, FIR OR CEDAR, STRAIGHT AND SOLID. WHERE REQUIRED BY CODE, BLOCKING SHALL BE FIRE RESISTANT TREATED AND AND BEAR THE APPROPRIATE MARKING INDICATING COMPLIANCE. BLOCKING MAY ALSO BE ROLL FORMED FROM 18 GAUGE STEEL.

PROVIDE BLOCKING BETWEEN STUDS WHEREVER FINISH MILLWORK, WALL CABINETS OR GRAPHIC PANELS OR ACCESSORIES MAY BE ATTACHED TO WALLS. BLOCKING SHALL BE SET PLUMB AND TRUE AND WITH SQUARE CORNERS.

INSTALLATION OF WOOD DOORS:
A. VERIFY THAT THE DOOR IS IN SOUND CONDITION, UNBLEMISHED, WITHOUT WARP, TWIST, BOW OR OTHER ATTRIBUTES CAUSING IT TO BE REJECTED UPON INSTALLATION.
B. TRIM WOOD DOORS AS NECESSARY TO PROVIDE A UNIFORM CLEARANCE OF 1/8 " AT JAMBS AND HEAD, AND A UNIFORM CLEARANCE AT THE THRESHOLD OR FLOOR TO PROPERLY CLEAR THE FLOOR COVERING DESCRIBED ON THE FINISH SCHEDULE.

INSTALLATION OF CASEWORK:
A. LAYOUT AND INSTALL CASEWORK ACCURATELY AND NEATLY AS DETAILED USING SKILLED WORKMEN THOROUGHLY TRAINED AND EXPERIENCED IN THE NECESSARY CRAFTS.
B. ANCHOR ALL ITEMS FIRMLY INTO POSITION.
C. COMPLETED INSTALLATION SHALL BE PLUMB AND LEVEL WITH ALL JOINTS ACCURATELY AND CLEANLY MATCHED AND TIGHT.
E. COMPLETE INSTALLATION SHALL BE ACCURATELY SCRIBED TO ADJACENT CONSTRUCTION TO AVOID GAPS AND OTHER DEFECTS.
D. UPON COMPLETION OF THE INSTALLATION, VISUALLY INSPECT EACH INSTALLED ITEM, REPAIR ALL DEFECTS SO THAT NONE ARE VISIBLE, THOROUGHLY CLEAN ALL EXPOSED AND SEMI-EXPOSED COMPONENTS FOR OPTIMUM OPERATION.

INSTALLATION OF WALL-MOUNTED ADJUSTABLE SHELVING:
A. STANDARDS: KNAPE AND VOGT #85 - 4'-0"L
B. BRACKETS: KNAPE AND VOGT #185 (SEE PLANS FOR SIZES)
C. STANDARDS TO BE ATTACHED TO PARTITIONS AT 32" O.C. MAXIMUM AND SECURED TO INTERIOR STUDS OR BLOCKING.

GROMMETS TO BE FIELD INSTALLED BY CONTRACTOR AT LOCATIONS AS SPECIFIED BY OWNER. GROMMETS TO BE AS FOLLOWS (OR EQUIVALENT): EDP SERIES, 2 1/2 " HOLES, 3" O.D., BLACK, BY DOUG MOCKETT CO., INC.

WALL PROTECTION AT DOORS TO BE AS FOLLOWS (OR EQUAL) AND INSTALLED AT LOCATIONS AS INDICATED ON DRAWINGS: WALL STOPS: HAGER #237W CONCAVE WALL STOP. DOME STOPS: HAGER #241F.

SECTION 06400: ARCHITECTURAL WOODWORK:

WOODWORK TO BE CUSTOM GRADE AS DEFINED IN THE LATEST EDITION OF THE ARCHITECTURAL WOODWORK INSTITUTE "QUALITY STANDARDS."

PARTICLEBOARD USED IN THE FABRICATION OF THE CASEWORK SHALL BE 3/4 " WHITE DENSITY TYPE 1, GRADE B, CLASS 2, MEETING ASTM D1037 SPECIFICATIONS. EXPOSED EDGES SHALL BE EDGE BANDED.

ALL EXPOSED SURFACES SHALL BE PLASTIC LAMINATE COVERED, EXCEPT THOSE SPECIFICALLY INDICATED AS EXPOSED HARDWOOD, SOLID SURFACING, ETC. ON THE DRAWINGS.

CASEWORK HARDWARE SHALL BE FURNISHED AND INSTALLED BY THE CASEWORK MANUFACTURER. HARDWARE SHALL BE AS FOLLOWS, AND EQUIVALENT SPECIFICATIONS MAY BE SUBSTITUTED.
A: DRAWER SLIDES: ACCURIDE #3832
B: FULL EXTENSION DRAWER SLIDES: ACCURIDE #4034
C: HINGES: BLUM INSERTA 125 DEGREE AND 170 DEGREE.
D: AVANTE 4" WIRE PULLS
E: CAMLOCKS: NATIONAL #8055

ARCHITECTURAL WOODWORK DELIVERED TO JOBSITE SHALL BE PROPERLY LOADED, PROTECTED AND SECURED IN TRUCK IN SUCH A MANNER AS TO PREVENT DAMAGES DURING TRANSPORT.

WOODWORK SHALL BE PROPERLY SECURED AND PROTECTED AT ALL TIMES AND CONTRACTOR SHALL HAVE DELIVERY SCHEDULED TO COINCIDE WITH INSTALLATION DATES IN ORDER TO MINIMIZE STORAGE AT SITE. CONTRACTOR TO PROVIDE STORAGE CONTAINER AT SITE.

SECTION 07920: SEALANTS AND CAULKING:

INSTALL AT ALL JOINTS BETWEEN DISSIMILAR MATERIALS.

CAULKING AT INTERIOR DRY AREAS SHALL BE LATEX CAULK.

CAULKING AT MILLWORK SHALL BE ACRYLIC LATEX CAULK TO MATCH EXACTLY THE LAMINATE COLOR.

SEALANTS AND CAULKING SHALL BE INSTALLED IN FULL ACCORDANCE WITH MANUFACTURER'S WRITTEN RECOMMENDATIONS FOR THE INTENDED USE AND IN SUCH A MANNER AS TO PROVIDE MOVEMENT IN 2 AXES.

AREAS TO BE CAULKED SHALL BE CLEAN AND DRY.

CAULK ALL JOINTS BETWEEN MILLWORK AND OTHER CONSTRUCTION.

SECTION 08110: HOLLOW METAL FRAMES:

HOLLOW METAL FRAMES SHALL CONFORM TO A.N.S.I. SDI 100 AND SHALL BE FABRICATED OF A366 STEEL, 16 GA. COMPLETE WITH HARDWARE REINFORCEMENT.

INSTALLATION SHALL BE IN ACCORDANCE WITH DOOR AND HARDWARE INSTITUTE PUBLICATION "THE INSTALLATION OF COMMERCIAL DOORS AND STEEL FRAMES, INSULATED STEEL DOORS IN WOOD FRAMES, AND BUILDERS HARDWARE."

SECTION 08400: ENTRANCES AND STOREFRONTS:

FRAMES: FLUSH GLAZED SYSTEM, 1 3/4 " X 4 1/2 " PROFILE. GLAZING GASKETS SHALL BE ELASTOMERIC EXTRUSIONS, COLOR TO MATCH ALUMINUM DOOR FRAMES AS SPECIFIED ON DOOR SCHEDULE.

GLASS/ALUMINUM SWINGING DOORS: NARROW STILE PREPARED FOR ATTACHMENT OF HARDWARE W/ SINGLE-ACTING OPERATION AS SHOWN. 1/4 " THICK TEMPERED GLASS, PIVOT HINGES AND LOCKSETS AS SPECIFIED ON DOOR SCHEDULE. BOTTOM RAIL SHALL BE A MINIMUM OF 12" HIGH TO MEET HANDICAP STANDARDS.

GLASS/ALUMINUM SLIDING DOORS: SLIDING OPERATION AS SCHEDULED WITH ONE FIXED PANEL. 1/4 " THICK TEMPERED GLASS, FLUSH PULLS EACH SIDE WITH HOOK BOLT LOCK AND MORTISE CYLINDER. BOTTOM RAIL SHALL BE A MINIMUM OF 10" IN HEIGHT TO MEET HANDICAP STANDARDS.

HARDWARE: MANUFACTURER'S HARDWARE AS SELECTED OR SCHEDULED. PUSH BARS OR HANDLES, ADJUSTABLE DOOR CLOSERS (TO MEET REQUIREMENTS) AND SILENCERS.

PROVIDE BREAK METAL CORNER GUARDS WHERE FRAME ABUTTS WALLS GREATER WIDTH. FINISH TO MATCH ALUMINUM STOREFRONT FINISH.

CHECK ACTUAL DOOR AND WINDOW OPENINGS IN CONSTRUCTION WORK ACCURATE FIELD MEASUREMENTS BEFORE FABRICATION. COORDINATE FABRICATION SCHEDULE WITH CONSTRUCTION PROGRESS AS DIRECTED BY CONTRACTOR TO AVOID DELAY OF WORK.

USE ANCHORAGE DEVICES TO SECURELY ATTACH FRAME ASSEMBLY TO STRUCTURE. ALIGN PLUMB AND LEVEL, FREE OF WARP OR TWIST.

CAULKING REQUIRED IN CONJUNCTION WITH ALUMINUM AND GLASS WORK SHALL BE ACCOMPLISHED BY ALUMINUM AND GLASS INSTALLER.

SECTION 08700: FINISH HARDWARE:

HARDWARE SHALL BE THE PRODUCT OF A NATIONALLY RECOGNIZED MANUFACTURER AND AS INDICATED ON THE DRAWINGS.

ALL LOCKSETS SHALL BE ADA RATED, LEVER TYPE HARDWARE AND NOTED IN THE SCHEDULE.

RE-KEYING OF THE RETAIL SPACE SHALL BE THE RESPONSIBILITY OF THE FRANCHISEE. THE LOCKS SHALL BE PROVIDED WITH CONSTRUCTION CORES AND KEYS THROUGHOUT THE CONSTRUCTION PERIOD.

INSTALLATION SHALL BE IN COMPLIANCE WITH THE STANDARDS OF THE DOOR AND HARDWARE INSTITUTE. ALL HARDWARE SHALL OPERATE FREELY AND IN THE MANNER FOR WHICH IT WAS INTENDED.

FURNISH AND INSTALL GRAY RESILIENT SILENCERS FOR HOLLOW METAL DOOR FRAMES AT THE RATE OF THREE FOR EACH SINGLE DOOR.

SECTION 08800: GLAZING: BY OTHERS

CONFORM TO FLAT GLASS MARKETING ASSOCIATION (FGMA) "GLAZING MANUAL" FOR GLAZING INSTALLATION METHODS, EXCEPT WHERE THERE ARE MORE STRINGENT REQUIREMENTS FROM LOCAL CODE AGENCIES.

ALL GLASS UNLESS OTHERWISE NOTED SHALL BE CLEAR FLOAT GLASS.

STOREFRONT GLASS:," CLEAR

DOORS: 1/4 " CLEAR TEMPERED (LAMINATED SAFETY GLASS WHERE REQUIRED BY LOCAL CODE AUTHORITY).

STOREFRONTS WITHIN 4'-0" OF DOORS OR 18" OF FLOOR: 1/4 " CLEAR TEMPERED.

SECTION 09250: GYPSUM WALLBOARD:

METAL STUDS: PROVIDE CHANNEL TYPE STUDS AND RUNNERS, ROLL FORMED FROM 20 GAUGE STEEL, MADE FOR SCREW ATTACHMENT OF GYPSUM WALLBOARD. SIZE AS INDICATED ON SCHEDULES.

GYPSUM WALLBOARDS: USE 5/8" THICK, TYPE "X", REGULAR TAPERED EDGE, 48" WIDE, LENGTHS AS REQUIRED, COMPLYING WITH ASTM C36 SPECIFICATIONS.

FASTENERS: USE SCREW TYPE AS RECOMMENDED BY FRAMING AND WALLBOARD MANUFACTURERS COMPLYING WITH ASTM C636.

METAL CASING BEAD: USG 200-A, 200-B, OR 200-C AS REQ. (OR EQUAL).

METAL CORNER BEAD: USG DUR-A-BEAD #800 (OR EQUAL).

ADHESIVES: USG DURABOND 210 OR 90 (OR EQUAL).

JOINT SYSTEM MATERIALS: COMPLY WITH ASTM C475 SPECIFICATIONS. MIX AND APPLY AS RECOMMENDED BY THE MANUFACTURER.

SECTION 09510: SUSPENDED ACOUSTICAL CEILINGS

INSTALL SUSPENSION SYSTEM ACCORDING TO ASTM C636 "RECOMMENDED PRACTICE FOR INSTALLATION OF METAL SUSPENSION SYSTEMS FOR ACOUSTICAL TILE AND LAY-IN PANELS.

INSTALL MAIN RUNNERS 48" ON CENTER, SUSPENDED BY NOT LESS THAN #10 GAUGE STEEL WIRE SPACED NO MORE THAN 36" O.C. FOR 24" GRID, OR AT EACH CORNER FOR CONCENTRATED LOADS, ALONG THE MAIN RUNNERS. WRAP WIRE HANGERS TIGHTLY AT LEAST THREE FULL TIMES.

DO NOT HANG SUSPENDED CEILING HANGERS FROM DUCTS, MECHANICAL ITEMS, CONDUITS OR PIPES, AND/OR THE ROOF. HANG WIRES FREE OF ALL SUCH ITEMS. HANG FROM STRUCTURAL MEMBERS ONLY.

INSTALL CROSS TEES TO OBTAIN A 24" X 24" EXPOSED GRID IN MAIN AREAS, AS INDICATED ON THE DRAWINGS.

INSTALL ACOUSTICAL PANELS ACORDING TO MANUFACTURER'S RECOMMENDATIONS.

INSTALLATION SHALL BE TRUE AND PLUMB WITHIN," WITHIN 10'-0".

AFTER COMPLETION OF INSTALLATION, REMOVE AND REPLACE DAMAGED OR OTHERWISE IMPROPERLY INSTALLED PANELS AND COMPONENTS.

GRID SHALL BE STANDARD STYLE, BAKED ENAMEL FINISH AND MEETING REQUIREMENTS OF A.S.T.M. C635.

SECTION 09660: RESILIENT TILE FLOORING AND BASE

REMOVE GREASE, DIRT, AND OTHER SUBSTANCES FROM SUBSTRATES. INSPECT SUBSTRATES FOR HOLES, CRACKS AND SMOOTHNESS. DO NOT PROCEED WITH LAYING OF TILE UNTIL UNTIL SUBSTRATES ARE SMOOTH AND HOLES AND CRACKS ARE FILLED.

INSTALL TILE IN ACCORDANCE WITH MANUFACTURER'S RECOMMENDED SPECIFICATIONS, USING ONLY EXPERIENCED WORKMEN. LAY FLOORING WITH JOINTS TIGHT AND IN TRUE ALIGNMENT, USING MANUFACTURER'S RECOMMENDED ADHESIVES AND PROCEDURES.

INSTALL RUBBER OR VINYL BASE STRAIGHT AND TRUE AND IN ACCORDANCE WITH MANUFACTURER'S INSTRUCTIONS, USING RECOMMENDED ADHESIVES AND PROCEDURES.

THOROUGHLY CLEAN ALL FINISH FLOORING USING A NEUTRAL SOAP OR CLEANER ATER THE FLOORING HAS BEEN BONDED TO SUBSTRATE.

PRIOR TO SCHEDULED COMPLETION DATE APPLY TWO COATS OF WAX, RECOMMENDED BY THE MANUFACTURER, TO ALL VINYL COMPOSITION TILE. BUFF THE LAST COAT AND LEAVE THE FLOOR CLEAR AND CLEAN.

INSTALL REDUCER OR TRANSITION STRIPS WHERE TILE ENDS AGAINST CONCRETE OR OTHER FINISH FLOORING MATERIALS OF DIFFERING HEIGHT.

SECTION 09680: CARPETING

INSTALLATION ADHESIVE: USE WATER RESISTANT, NON-STAINING TYPE AS RECOMMENDED BY CARPET MANUFACTURER WHICH COMPLIES WITH THE FLAMMABILITY REQUIREMENTS FOR INSTALLED CARPET.

EXAMINE SUBSTRATE FOR MOISTURE CONTENT AND OTHER CONDITIONS UNDER WHICH CARPETING IS TO BE INSTALLED. REPAIR MINOR HOLES, CRACKS, DEPRESSIONS OR ROUGH AREAS USING MATERIAL RECOMMENDED BY CARPET OR ADHESIVE MANUFACTURER.

THE FLOOR MUST BE FREE OF ALL FOREIGN MATTER, GREASE, OIL, PAINT, DIRT, OLD OR NON-COMPATIBLE ADHESIVES ETC. ALL HOLES, CRACKS AND DEPRESSIONS MUST BE FILLED WITH A LATEX FLASHING COMPOUND AND ANY PROTRUSIONS MUST BE ELIMINATED.

SWEEP OR VACUUM THE FLOOR USING A SWEEPING COMPOUND WITHOUT AN OIL OR WAX BASE.

SEAL ALL CONCRETE FLOOR TO PREVENT DUSTING OR POWDERING WHICH WOULD BE DETRIMENTAL TO BONDING USING A SEALER RECOMMENDED BY ADHESIVE MANUFACTURER.

COMPLY WITH MANUFACTURER'S RECOMMENDATIONS AND INSTRUCTIONS FOR DIRECTION OF CARPET; MAINTAIN UNIFORMITY OF CARPET DIRECTION AND LAY OF PILE. AT DOORS, CENTER SEAMS UNDER DOORS.

EXTEND CARPET UNDER OPEN-BOTTOMED OBSTRUCTIONS AND UNDER REMOVABLE FLANGES AND FURNISHINGS.

EXPANSION JOINTS: DO NOT BRIDGE BUILDING EXPANSION JOINTS WITH CONTINUOUS CARPETING, PROVIDE FOR MOVEMENT.

FIT SECTIONS OF CARPET IN EACH SPACE PRIOR TO APPLICATION OF ADHESIVE. TRIM EDGES AND APPLY SEAMING CEMENT.

APPLY ADHESIVE UNIFORMLY TO SUBSTRATE IN ACCORDANCE WITH MANUFACTURER'S INSTRUCTIONS. BUTT CARPET EDGES TIGHTLY TOGETHER TO FORM SEAMS WITHOUT GAPS. ROLL ENTIRE CARPET AREA LIGHTLY TO ELIMINATE AIR POCKETS AND ENSURE UNIFORM BOND. REMOVE ADHESIVE PROMPTLY FROM FACE OF CARPET.

PERFORM EDGE TRIMMING AS REQUIRED.

INSTALL CARPET EDGE GUARD WHERE CARPET IS EXPOSED; ANCHOR GUARDS TO SUBSTRATE.

VACUUM CARPET USING COMMERCIAL MACHINE WITH FACE-BEATER ELEMENT. REMOVE SPOTS AND REPLACE CARPET WHERE SPOTS CANNOT BE REMOVED. REMOVE ANY PROTRUDING FACE YARN WITH SCISSORS.

SECTION 09900: PAINTING

FURNISH AND LAY DROP CLOTHS IN ALL AREAS WHERE PAINTING IS BEING DONE TO PROTECT FLOORS AND OTHER WORK FROM DAMAGE.

MAKE SURE FLOORS AND ADJACENT SURFACES AS WELL AS SURFACES TO BE PAINTED ARE CLEAN BEFORE PAINTING.

PAINT SHALL BE THE PRODUCT OF A SINGLE MANUFACTURER AND SHALL BE AS RECOMMENDED BY THE MANUFACTURER FOR THE SPECIFIC USE, MATERIAL, AND CONDITION OF THE SURFACE TO BE PAINTED.

ALL GYPSUM FINISHES SHALL RECEIVE ONE COAT LATEX WALL PRIMER AND TWO COATS LATEX WALL PAINT. SATIN FINISH UNLESS OTHERWISE NOTED.

ALL WOOD AND METAL FINISHES SHALL RECEIVE ONE COAT PRIMER AND TWO COATS SEMI-GLOSS ALKYD ENAMEL.

NATURAL OR STAINED WOOD SHALL RECEIVE TWO COATS OF CLEAR POLYURETHANE.

APPLY MATERIALS UNDER ADEQUATE ILLUMINATION. APPLY MATERIALS EVENLY AND SMOOTHLY WITHOUT RUNS OR SAGS.

ALLOW SUFFICIENT DRYING TIME BETWEEN COATS AS RECOMMENDED BY THE MATERIAL MANUFACTURER.

THE MINIMUM DRY FILM THICKNESS SHALL BE AS RECOMMENDED BY THE MANUFACTURER FOR THE SPECIFIC CONDITION, BUT IN NO CASE LESS THAN 5 MILLS.

AT COMPLETION OF THE WORK, CLEAN OFF PAINT SPOTS, OIL AND STAINS FROM FLOORS, WALLS, GLASS, HARDWARE ETC.

SECTION 09950: WALLCOVERING

EXAMINE ALL SURFACES TO RECEIVE WALLCOVERING BEFORE BEGINNING WORK TO DETERMINE THAT THEY ARE SOUND, DRY, CLEAN AND READY TO RECEIVE FINAL FINISH.

FOR NEW DRYWALL CONSTRUCTION, A COAT OF MANUFACTURER'S RECOMMENDED PRIMER SHALL BE APPLIED TO THE SURFACE BEFORE APPLICATION OF WALLCOVERING, FOR EASE OF SUBSEQUENT REMOVAL.

FOLLOW MANUFACTURER'S DIRECTIONS FOR MIXING AND APPLYING ADHESIVE AND PRIMER.

MIX PASTE THOROUGHLY. APPLY PASTE ON BACK OF MATERIAL WITH BRUSH
OR ROLLER IN A THIN, EVEN COAT OVER ENTIRE PANEL.
USE PANELS IN EXACT ORDER AS THEY ARE CUT FROM THE ROLL.

INSTALL PANELS ON THE HANGING SURFACE, REVERSING EVERY OTHER PANEL OF NON-MATCH PATTERNS UNLESS OTHERWISE INSTRUCTED BY MANUFACTURER.

FILL IN OVER DOORS AND WINDOWS WITH PANELS CUT IN CONSECUITVE ORDER FROM THE ROLL.

SMOOTH FABRIC TO HANGING SURFACE WITH STIFF-BRISTLED SWEEP BRUSH OR A FLEXIBLE BROAD KNIFE TO ELIMINATE BUBBLES AND ENSURE ADHESION.

VERTICAL JOINTS SHALL NOT OCCUR LESS THAN SIX INCHES FROM OUTSIDE OR INSIDE CORNERS.

WHERE APPLICABLE, INSTALL WALLCOVERING BEFORE INSTALLATION OF CASING, BASES, CABINETS ETC.

ANY VARIATION IN COLOR AND/OR PATTERN MATCH SHOULD BE IMMEDIATELY COMMUNICATED TO THE MANUFACTURER'S REPRESENTATIVE FOR HIS INSPECTION BEFORE PROCEEDING WITH FURTHER INSTALLATION.

SECTION 10400: SIGNAGE:

THE SIGN CONTRACTOR SHALL IDENTIFY AND SHALL COMPLY WITH ALL LOCAL GOVERNMENT SIGNAGE CODES, ORDINANCES, AND RESTRICTIONS, ALL STORE RESTRICTIONS, AND ALL BUILDING OR DEVELOPMENT RESTRICTIONS, AND SHALL OBTAIN ALL RQUIRED APPROVALS AND PERMITS, AND PERMISSION OF THE BUILDING OWNER.

SIGNAGE CONTRACTOR SHALL SUBMIT SHOP DRAWINGS TO THE IBT PROJECT MANAGER ACCORDING TO THE SCHEDULE PROVIDED HIM, SHOWING LOCATION, CONSTRUCTION, ANCHORAGE, MATERIALS, AND ELECTRICAL REQUIREMENTS. FABRICATION OF SIGN SHALL NOT START WITHOUT APPROVAL.

ALL ELECTRICAL COMPONENTS SHALL COMPLY WITH THE NATIONAL ELECTRICAL CODE, AND ALL APPLICABLE STATE AND LOCAL CODES AND UTILITY SUPPLIER REQUIREMENTS.

ASSEMBLIES SHALL BE SECURELY ANCHORED USING ANCHORS AND METHODS MOST APPROPRIATE TO THE SUPPORTING ELEMENTS, PLUMB, LEVEL, OR SQUARE WITH ADJACENT CONSTRUCTION.

IN NO CASE SHALL SIGN IMPOSE A STRUCTURAL LOAD IN EXCESS OF THE CALCULATED CAPACITY OF SUPPORTING ELEMENTS.

SIGNS SHALL BE WATERPROOF OR PROVIDE FOR WEEPING OF MOISTURE.

INSTALLATION SHALL BE COMPLETE AND OPERATIONAL AT TIME OF DELIVERY WITH ALL METERING, SERVICES, SWITCHES, BALLASTS, LAMPS, TRANSFORMERS AND TRIM AND ACCESSORIES NECESSARY FOR PROPER OPERATION AND APPEARANCE. ELECTRICAL SERVICE TO THE SIGNAGE WILL BE PROVIDED BY ELECTRICAL CONTRACTOR.

FOAM BACKED SIGNS SHALL BE FURNISHED WITH TAPE ON BACK AND SET WITH DABS OF SILICONE.

TACTILE EXIT SIGNAGE:
COMPLY WITH A117B.5.1

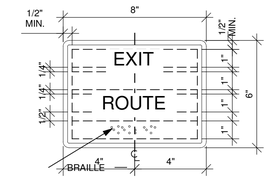


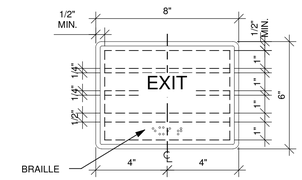


INTERNATIONAL SYMBOL OF ACCESSIBILITY:

(a) SYMBOL PROPORTIONS

(b) DISPLAY CONDITIONS

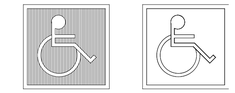

RESTROOM SIGNS:

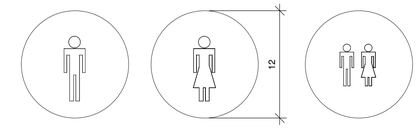


**LEASE AGREEMENT**
**Restaurant**

This Lease Agreement (the "Lease") made and entered into as of the___ 2nd day of October 2015, between **SCP at Liberty Park, LLC**, an Alabama limited liability company (the "Landlord"), and **YP – Liberty Park, LLC**, an Alabama limited liability company (the "Tenant");

WHEREAS, Landlord is owner of a parcel of land located at 1700 Urban Parkway, Vestavia Hills, Alabama (the "Land"), and it is the Landlord's intent to construct a one story building containing approximately 9,000 square feet of rentable area (the "Building") and related improvements on the Land (the Land and Building collectively the "Property"); and

WHEREAS, once Landlord has constructed the Building, Landlord intends to lease suites in the Building to a variety of tenants; and

WHEREAS, Landlord and Tenant mutually agree that the provisions of this Lease are conditioned on the ability of Landlord to obtain all necessary permits, easements, variances, waivers and any other approvals related to the Property and to fulfill all other requirements needed to develop the parcel and construct the Building.

NOW, THEREFORE, in consideration of the herein set forth, the parties agree to the following:

In consideration of the rents, mutual covenants and agreements set forth herein, the Landlord hereby leases to Tenant, and Tenant hereby leases from Landlord a suite in the Building which shall consist of approximately 2,400-2,500 rentable square feet (the "Premises"), as further described on Exhibit "A" hereto. Landlord agrees that the Tenant's Premises shall be the space in the Building closest to Liberty Parkway (identified on Exhibit A as Suite/Space 640) unless, prior to March 1, 2016, the Landlord has executed a lease with another tenant who plans to operate a drive-thru in the Building and desires Suite/Space 640. In such circumstance, the Tenant agrees to take 2,400-2,500 rentable square feet on the other end of the Building, such space more particularly described as Suite/Space 680 on Exhibit "A" to this Lease Agreement.

The following, together with the General Provisions of Lease attached hereto and incorporated herein by reference, constitute the provisions of this Lease.

(a) Landlord's Address:
SCP at Liberty Park, LLC
c/o The Sanders Trust, LLC
1000 Urban Center Drive, Suite 675
Birmingham, Alabama 35242

With a copy to:
Wallace Jordan Ratliff & Brandt
800 Shades Creek Parkway, Suite 400
Birmingham, Alabama 35209
Attn: Michael J. Brandt

(b) Tenant's Address:
YP – Liberty Park, LLC
7309 Kings Mountain Place
Vestavia, Alabama 35242

(c) Premises Delivery Date: Within two hundred seventy (270) days from the date of Landlord's construction permit to construct the Building (the "Delivery Date") Landlord shall deliver the Premises to Tenant, in shell condition as set forth in subsection (l) below, and release Tenant to commence construction of Tenant's improvements based on plans and specifications that have been approved by Landlord, all subject to the Landlord Contingency below. Landlord shall exercise good faith, commercially reasonable efforts to obtain Landlord's construction permit and proceed with construction of the Building in an attempt to achieve a Delivery Date on July 1, 2016.

(d) Lease Term Commencement Date: The term of this Lease shall commence (the "Commencement Date") on the Premises Delivery Date. Notwithstanding the foregoing, in no event shall the Commencement Date be a date earlier than June 1, 2016.



THE CONTENTS OF THIS DRAWING WILL REMAIN THE PROPERTY OF THOMAS F. TEDROW, AIA. IT'S CONTENTS INCLUDING ALL INFORMATION, SHALL NOT BE REPRODUCED USING ANY MEANS WITHOUT EXPRESSED WRITTEN CONSENT AND/OR PERMISSION FROM THOMAS F. TEDROW, AIA

STATE OF ALABAMA
THOMAS F. TEDROW
8290
REGISTERED ARCHITECT

ARCHITECT/ENGINEER STAMP

YOUR PIE

THOMAS F. TEDROW, AIA
ARCHITECT
2866 ADAMS BROOK WAY
SNELLVILLE, GA 30078
PH. 678.777.5548
E-MAIL: tom.tedrow@tedrowdesign.com

YOUR PIE
PROMINENCE SHOPS AT LIBERTY PARK
8000 LIBERTY PARKWAY
VESTAVIA HILLS, ALABAMA 35242

| REV. NO. | DATE | DESCRIPTION |
|---|---|---|

PROJECT NO: YPAL-07
DRAWN BY: DLM
CHECKED BY: TT
ISSUE DATE: 08-12-16

SPECIFICATIONS

A0.1

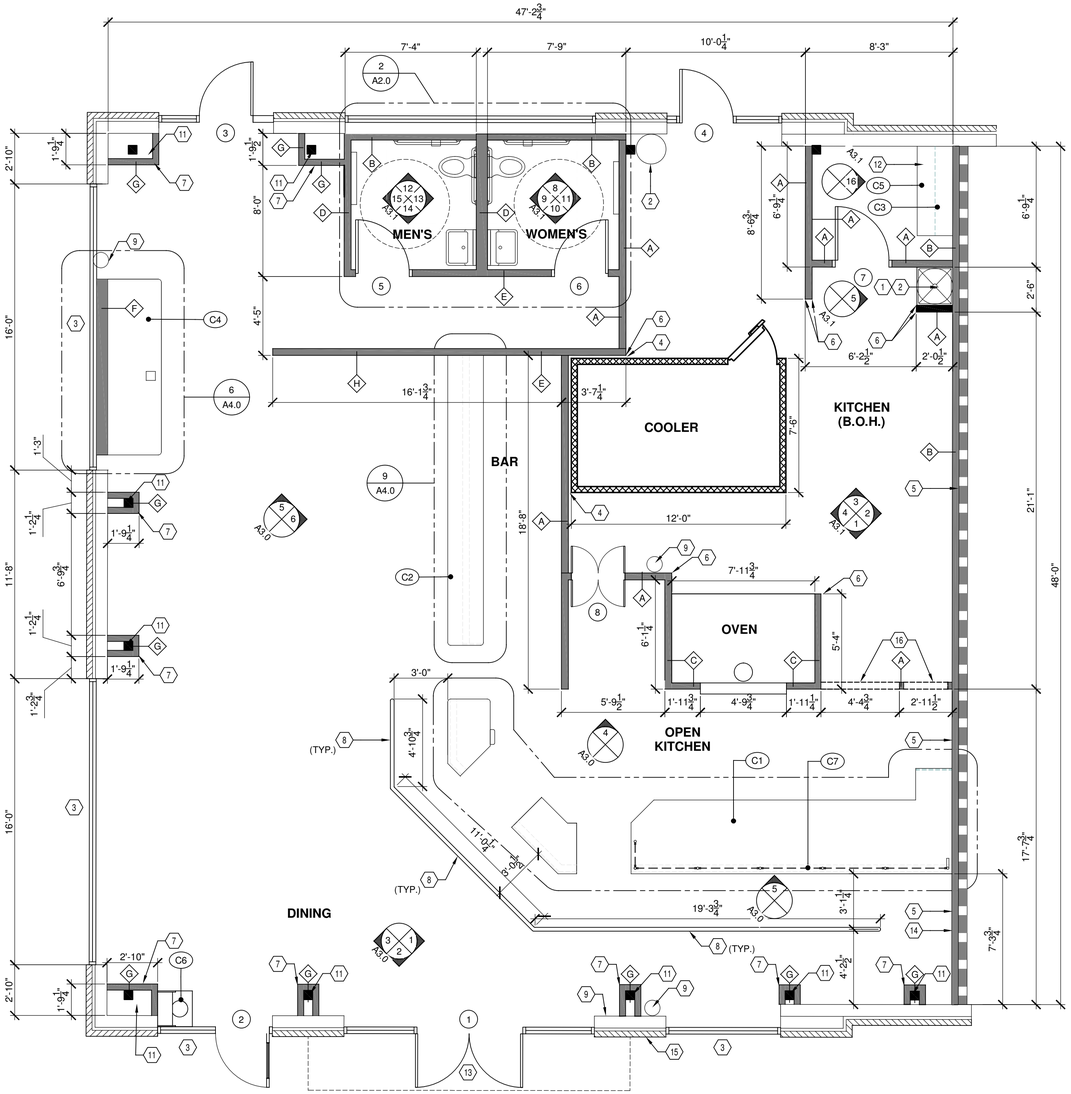


1 A1.0 FLOOR PLAN
1/4" = 1'-0"

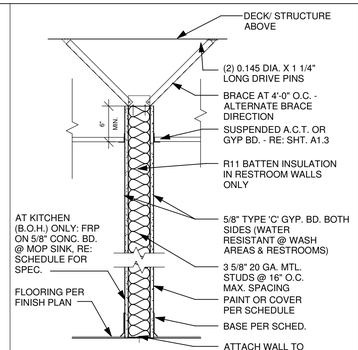


WALL PARTITION A

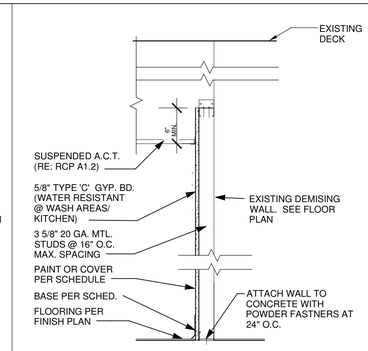


WALL PARTITION B

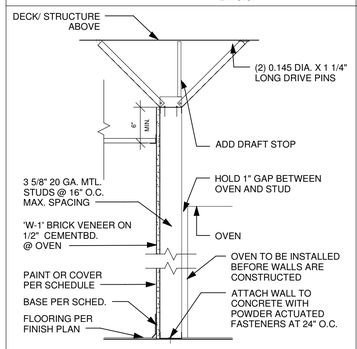


WALL PARTITION C

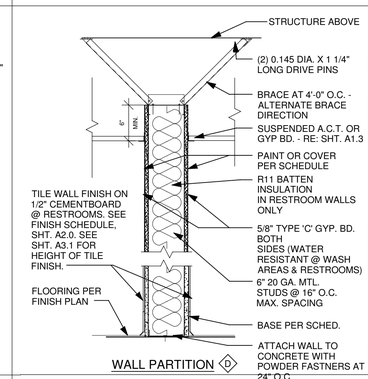


WALL PARTITION D

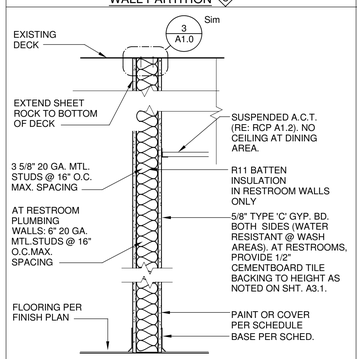


WALL PARTITION E

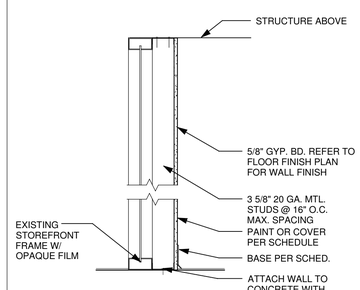


WALL PARTITION F

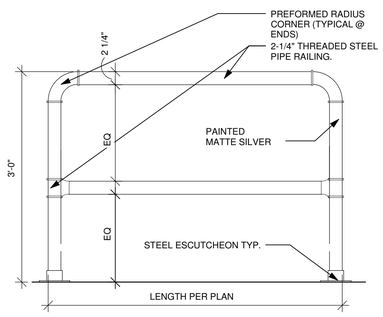


QUEING RAIL DETAIL

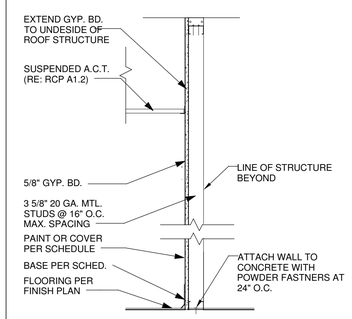


WALL PARTITION G

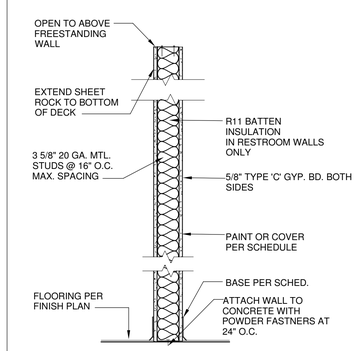


WALL PARTITION H

## FLOOR PLAN KEY NOTES

1. MOP SINK - SEE PLUMBING DRAWINGS.
2. HOT WATER HEATER ON PLATFORM (AT 5'-0" AFF.)ABOVE MOP SINK. SEE 5 & 6/ A3.1. SEE PLUMBING DRAWINGS.
3. EXISTING STOREFRONT/ DOOR TO REMAIN. SEE DOOR SCHEDULE, SHT. A2.1 FOR INFORMATION..
4. G.C. SHALL COORDINATE INSTALLATION OF CORNER CLOSURE ANGLES @ WALK-IN COOLER/FREEZER w/EQUIPMENT SUPPLIER.
5. EXISTING TENANT DEMISING WALL TO REMAIN. MAINTAIN INTEGRITY AND FIRE RATING OF WALL, REFER TO A4.1. PREPARE WALL FOR NEW FINISHES AS NOTED.
6. PROVIDE 6' TALL 18GA. STAINLESS STL. CORNER GUARD FROM TOP OF BASE.
7. NEW COLUMN BUILDOUT BY G.C. REFER TO WALL PARTITION DETAIL "G".
8. QUEUING BARS WITH STEEL SUPPORT POSTS. REFER TO QUEUING RAIL DETAIL.
9. FIRE EXTINGUISHER W/ CLASS 2A-10BC RATING, 5LB. CAPACITY (BY G.C.) LOCATED THROUGHOUT FACILITY NOT TO EXCEED 75 FEET DISTANCE. COORIDINATE EXACT LOCATION WITH LOCAL FIRE OFFICIALS.
10. G.C. TO COORDINATE OPENINGS WITH CORPORATE FOR THE POS WIRING.
11. EXISTING COLUMN TO REMAIN.
12. OFFICE DESK AND WALL CABINET. SEE DET. 7/A3.1.
13. G.C. TO REMOVE PORTION OF DOOR AND WINDOW FOR OVEN INSTALLATION AND REINSTALL TO MATCH EXISTING.
14. STENCILED 'YOUR PIE' WALL MURAL
15. WALL MOUNTED KNOX BOX, AS REQUIRED BY TECHNICAL CODE OF BIRMINGHAM.
16. WALL OPENING AT REFRIGERATOR AND PASS-THROUGH WINDOW. SEE SHT. A3.0 FOR ELEVATIONS AND SHT. A4.0 FOR DETAILS.

## KEY TO WALL TYPES:

- EXISTING 1HR RATED TENANT DEMISING WALL
- EXISTING WALL TO REMAIN.
- FULL HEIGHT WALLS: 20 GA. STEEL STUDS @ 16" O.C., SEE PLAN FOR WALL TYPE AND WALL TYPE DETAILS
- KNEE WALLS: 20 GA. STEEL STUDS @ 16" O.C. WITH STEEL SUPPORT POSTS AS INDICATED.

## GENERAL NOTES:

1. DO NOT SCALE THE DRAWINGS . ANY DIMENSIONAL DISCREPANCIES SHALL BE BROUGHT UP TO THE ATTENTION OF THE ARCHITECT FOR CLARIFICATION PRIOR TO COMMENCING CONSTRUCTION. ALL DIMENSIONS ARE TO FINISH FACE, U.N.O..
2. PROVIDE 3 1/2" SOUND BATT IN ALL RESTROOM WALLS AND 6" BATT OVER ALL RESTROOM CEILINGS.
3. PROVIDE WATER RESISTANT (W.R.) GYPSUM BOARD THROUGHOUT RESTROOMS (WALLS & CEILINGS) AS INDICATED IN DRAWINGS.
4. PROVIDE BLOCKING FOR SUPPORT OF ALL B.O.H. WALLS BETWEEN THE HEIGHTS OF 34" - 82".
5. PROVIDE BLOCKING FOR SHELVING, GRAB BARS, TOILET ACCESORIES & MILLWORK IN RESTROOMS. REFER TO SHEET A2.0 FOR INFORMATION.
6. G.C. SHALL VERIFY ALL ROUGH OPENINGS PRIOR TO FRAMING.
7. REFER TO SHEET A2.0 FINISH, MATERIAL AND RESTROOM ACCESSORIES SCHEDULES.
8. REFER TO SHEET A2.1 FOR DOOR & WINDOW SCHEDULES & DETAILS.
9. REFER TO SHEET EQ.1 FOR EQUIPMENT & SEATING INFORMATION.
10. G.C. SHALL VERIFY SIZE AND FIT OF EQUIPMENT PRIOR TO INSTALLATION.
11. G.C. SHALL COORDINATE ALL WORK TO BE PERFORMED AND PROVIDE A CONSTRUCTION SCHEDULE TO THE OWNER. G.C. IS TO COORDINATE WORKING HOURS, DELIVERIES, TRASH REMOVAL, STORAGE, ETC. WITH OWNER.
12. APPROVAL OF THESE DRAWINGS BY THE LANDLORD OR BY GOVERNING AUTHORITIES DOES NOT RELEASE THE G.C. FROM COMPLYING WITH ALL APPLICABLE CODES AND STANDARDS.
13. G.C. IS FULLY RESPONSIBLE FOR COSTS FOR PERMITS AND LICENSE FEES, UTILITY CONNECTION FEES, AND TRASH REMOVAL FEES.
14. G.C. SHALL REMOVE ALL DEBRIS AND LEAVE JOB SITE CLEAN.
15. ALL SIGNAGE SHOWN IN THESE DRAWINGS IS REPRESENTATIONAL ONLY. OBTAIN SIGN INFORMATION FROM OWNER.
16. G.C. SHALL VISIT JOBSITE AND BECOME FAMILIAR WITH EXISTING CONDITIONS BEFORE SUBMITTING BID AND/OR FINAL CONSTRUCTION COST TO OWNER. ANY DISPREPANCIES BETWEEN THESE DRAWINGS AND EXISTING CONDITIONS SHALL BE BROUGHT TO THE ATTENTION OF ARCHITECT BY THE G.C. PRIOR TO THE START OF ANY WORK.
17. ALL SIGNS REQUIRE SEPARATE PERMITS.
18. ALL WOOD IN NON-BEARING CONSTRUCTION TO BE FIRE RETARDANT TREATED WOOD.
19. ALL WALL AND CEILING FINISHES TO MEET CLASS "C" / FLOORS TO MEET CLASS II MINIMUMS PER ASTM E-84 STANDARDS.
20. ALL GYP. BD. AT WALLS SHALL BE 5/8" FIRE RATED TYPE 'C'.

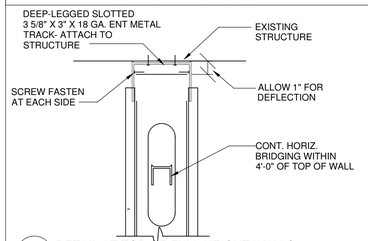


3 A1.0 DETAIL AT TOP OF FULL HEIGHT WALLS
1 1/2" = 1'-0"

THE CONTENTS OF THIS DRAWING WILL REMAIN THE PROPERTY OF THOMAS F. TEDROW, AIA. IT'S CONTENTS INCLUDING ALL INFORMATION, SHALL NOT BE REPRODUCED USING ANY MEANS WITHOUT EXPRESSED WRITTEN CONSENT AND/OR PERMISSION FROM THOMAS F. TEDROW, AIA

STATE OF ALABAMA — THOMAS F. TEDROW — 8290 — REGISTERED ARCHITECT

ARCHITECT/ENGINEER STAMP

THOMAS F. TEDROW, AIA
ARCHITECT
2866 ADAMS BROOK WAY
SNELLVILLE, GA 30078
PH. 678.777.5548
E-MAIL: tom.tedrow@tedrowdesign.com

YOUR PIE
PROMINENCE SHOPS AT LIBERTY PARK
8000 LIBERTY PARKWAY
VESTAVIA HILLS, ALABAMA 35242

| REV. NO. | DATE | DESCRIPTION |
|---|---|---|

PROJECT NO: YPAL-007
DRAWN BY: DLM
CHECKED BY: TT
ISSUE DATE: 08-12-16

FLOOR PLAN

A1.0

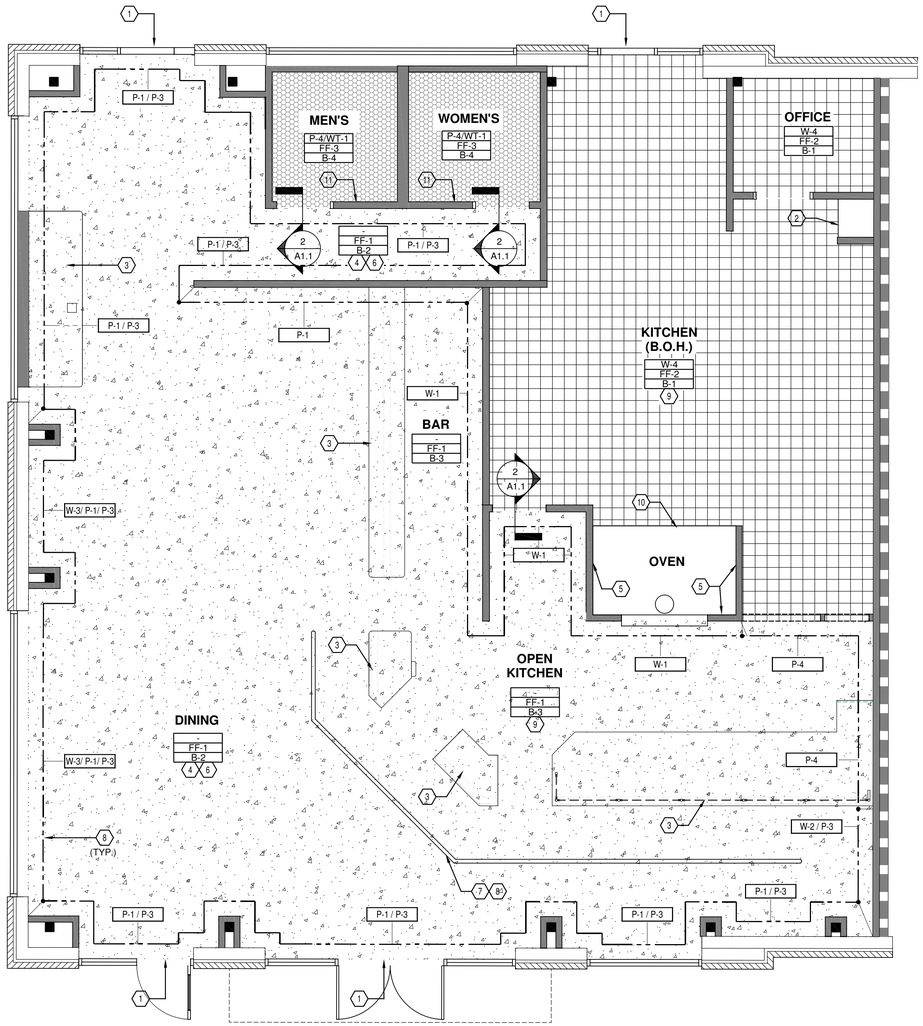


1 A1.1 FINISH PLAN
1/4" = 1'-0"

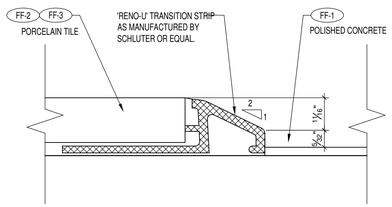


2 A1.1 FINISH PLAN
N.T.S.

## FINISH PLAN KEY NOTES

1. EXISTING DOOR THRESHOLD - COORDINATE TILE INSTALLATION w/EXISTING CONDITIONS. SEE DOOR SCHEDULE.
2. MOP SINK
3. CABINET/COUNTER - SEE MILLWORK SCHEDULE ON SHEET EQ.1 & MILLWORK SHOP DRAWINGS. PROVIDE BASE B-1 @ ALL CASEWORK ITEMS AS APPLICABLE (V.I.F.).
4. PREPARE FLOOR SLAB BY GRINDING AND SANDING AS REQUIRED PER MANUFACTURER RECOMMENDATIONS FOR APPLICATION OF NEW FLOOR FINISH. SEE FINISH SCHEDULE, SHT. A2.0
5. EXPOSED STUDS AT SHROUD OVEN.
6. IN DINING AREA ( OPEN CEILINGS, PAINT WALLS ABOVE 12'-0" AFF. WITH 'P-3' FINISH. BELOW 12-0", PAINT WALLS AS INDICATED ON FINISH PLAN.
7. PREFINISHED METAL QUEUING BARS
8. AT KNEEWALL AND QUEUE WALL, ALL WOOD TRIM IS 'WS-1' FINISH. SEE FINISH SCHEDULE, SHT. A2.1.
9. PROVIDE POSITIVE SLOPE TO FLOOR DRAINS. SEE NOTE #5. SEE PLUMBING DWGS. FOR FLOOR DRAIN LOCATIONS.
10. EXTENTS OF FLOOR TILE. G.C. TO COORDINATE EXTENTS OF FLOOR TILE INSTALLATION WITH OVEN SPECIFICATIONS.
11. BORDER TILE FOR 'FF-3' HEXAGONAL FLOOR TILE. SEE FINISH SCHEDULE SHT. A2.0.

## GENERAL FLOOR FINISH NOTES

1. REFER TO PLUMBING PLANS FOR FLOOR DRAIN, FLOOR SINK, HUB DRAIN & CLEANOUT LOCATIONS. COORDINATE TILE INSTALLATION AROUND THESE ITEMS AND w/PLUMBING CONTRACTOR TO ACHIEVE A CLEAN, FLUSH INSTALLATION.
2. BASE NOT REQUIRED @ CONCEALED AREAS AND @ STOREFRONTS EXTENDING TO FLOOR.
3. REFER ALSO TO INTERIOR ELEVATIONS ON SHEET A3.0 FOR EXTENT OF BASE & WALL FINISHES
4. WHEREVER POSSIBLE, ALIGN FLOOR TILE GROUT JOINTS @ DISIMILAR FLOOR TILE TRANSITIONS & w/BASE TILES AS APPLICABLE.
5. PROVIDE POSITIVE SLOPE TO FLOOR DRAINS WHERE POSSIBLE. FIELD COORDINATE w/EXISTING CONDITIONS. COORDINATE SLOPES w/TILE CONTRACTOR TO ACHIEVE CLEAN, SMOOTH TRANSITION. SEE PLUMING DWGS.

## SYMBOL LEGEND

FF-1 POLISHED CONCRETE

FF-2 PORCELAIN TILE

FF-3 HEXAGONAL TILE W/ BORDER TILES

EXTENTS/ DEMARCATION OF WALL FINISH

## FINISH TAG LEGEND

XX-X WALL FINISH
XX-X FLOOR BASE
X-X FLOOR FINISH

X-X / X-X WALL FINISHES

THE CONTENTS OF THIS DRAWING WILL REMAIN THE PROPERTY OF THOMAS F. TEDROW, AIA. IT'S CONTENTS INCLUDING ALL INFORMATION, SHALL NOT BE REPRODUCED USING ANY MEANS WITHOUT EXPRESSED WRITTEN CONSENT AND/OR PERMISSION FROM THOMAS F. TEDROW, AIA

STATE OF ALABAMA
THOMAS F. TEDROW
0290
REGISTERED ARCHITECT

ARCHITECT/ENGINEER STAMP

THOMAS F. TEDROW, AIA
ARCHITECT
2866 ADAMS BROOK WAY
SNELLVILLE, GA 30078
PH. 678.777.5548
E-MAIL: tom.tedrow@tedrowdesign.com

YOUR PIE
PROMINENCE SHOPS AT LIBERTY PARK
8000 LIBERTY PARKWAY
VESTAVIA HILLS, ALABAMA 35242

| REV. NO. | DATE | DESCRIPTION |
|---|---|---|

PROJECT NO: YPAL-07
DRAWN BY: DLM
CHECKED BY: TT
ISSUE DATE: 08-12-16

FINISH PLAN

A1.1

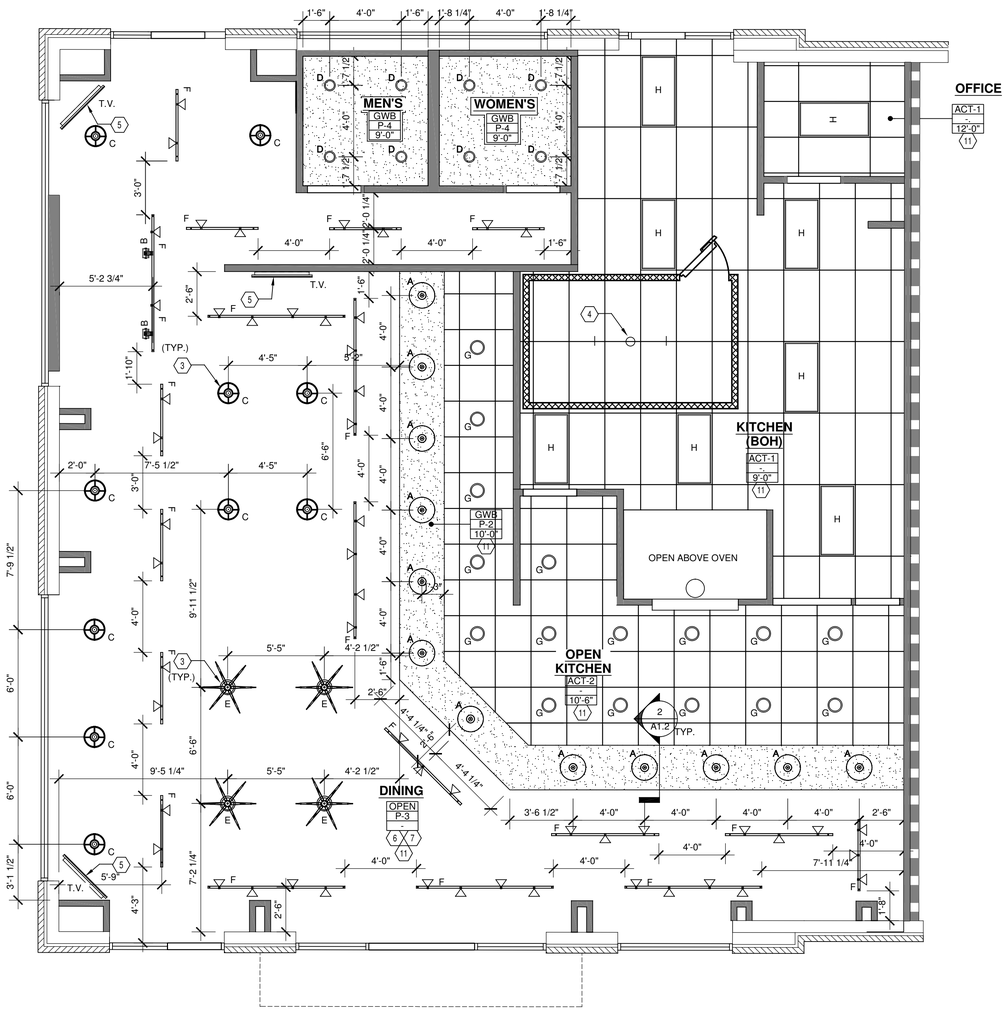


1 / A1.2 REFLECTED CEILING PLAN
1/4" = 1'-0"

# LIGHTING SCHEDULE

| SYMBOLS | | MNTG. HTS |
|---|---|---|
| A | Hi Lite 65311369 - Weathered Zinc - 14" RLM w/ 30" Stem & Canopy | 6'-6" A.F.F. TO BOTTOM |
| B | HI Lite 65311377 -Weathered Zinc - 8" Angled Shade W/ 30" Stem & Canopy | 6'-6" A.F.F. TO BOTTOM |
| C | HI Lite65311385 -Raw Aluminum & Glass - 14" Aluminum Pendant w/ Glass Shade | 6'-6" A.F.F. TO BOTTOM |
| D | Cree 72001234 & 72000327 - White - 6" LED Module & Housing | |
| E | Troy Lighting 88417912 - Old Silver - Hand Worked Iron, Conduit Fixture | 6'-6" A.F.F. TO BOTTOM |
| F F | ConTech 16200652, 16200636, & 16202947 - WHITE -Track Lighting System | TRACK MOUNTED DIRECTLY TO CLG. IN DROP CLG. OR 10'-0" A.F.F. TO BOTTOM OF TRACK IN OPEN CLG. |
| H | Mobern 09700148 - White - 3 Lamp 2 X 4 Lay In<br>H-Alt. -Cree 72002406 -WHITE -LED 2 X 4 Lay In | |
| I | 2'X2' FLUORESCENT ACRYLIX TROFFER, 2 LAMPS, MULTIVOLT BALLAST, 120 VOLTS. LAMPS: VERIFY | |
| EM | EMERGENCY FIXTURE | SEE ELEC. LIGHTING PLAN FOR PLACEMENT |
| X | EXIST SIGN | SEE ELEC. LIGHTING PLAN FOR PLACEMENT |
| | FLAT SCREEN TV LG | LG 42" - 60" CLASS 1080 LED TV WITH SMART TV<br>T.V. & MOUNTING HARDWARE PROVIDED BY TENANT, INSTALLED BY G.C. |

CEILING TAG
XX-X ← TYPE
X-X ← FINISH
X'-X" ← HEIGHT

NOTE: REFER TO MECHANICAL & ELECTRICAL DRAWINGS FOR SPECIFIC LIGHT & DIFFUSER INFORMATION.

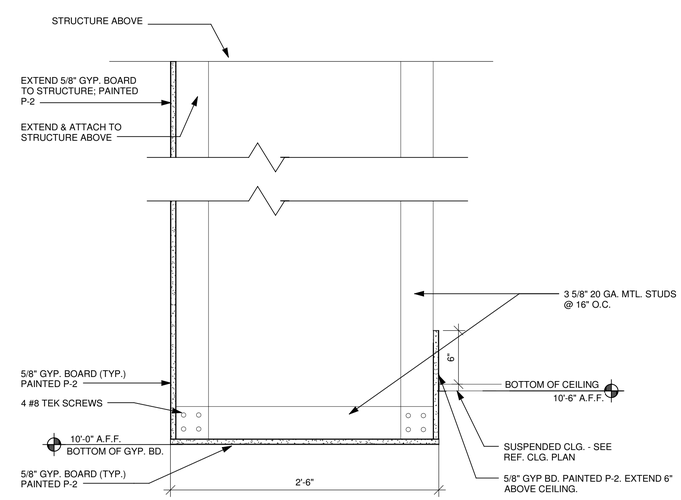


2 / A1.2 SOFFIT DETAIL - SERVICE - ACT CEILING
1 1/2" = 1'-0"

## CEILING PLAN KEY NOTES

1. CENTER TRACK/ LIGHTING ON BEVERAGE COUNTER
2. LINE OF WALK-IN COOLER BELOW. CEILING TO EXTEND ABOVE COOLER.
3. CENTER PENDANT ON TABLE BELOW
4. LIGHT FIXTURE BELOW INSIDE WALK-IN COOLER .
5. T.V. (WALL OR CEILING MOUNTED) AND MOUNTING BRACKETS PROVIDED BY TENANT. TVs MOUNTED/INSTALLED BY GC. INSTALL BLOCKING AS NEEDED, HANG WITH BRACKETS AND RODS.
6. IN DINING AND CORRIDOR WITH OPEN CEILINGS; G.C. TO PAINT ALL STEEL, STEEL DECK, EXPOSED UTILITIES, EXCLUDING MECHANICAL DUCTWORK, ABOVE 12'-0" AFF., BLACK 'P-3'. DO NOT PAINT MECHANICAL DUCTWORK.
7. NEW MECHANICAL DUCTWORK TO BE EXPOSED IN DINING/ CORRIDOR OPEN CEILING AREAS. SEE MECHANICAL DRAWINGS.
8. EXTERIOR ILLUMINATED SIGNAGE ABOVE DOOR AT EXTERIOR FACADE- SEE ELECTRICAL DRAWINGS
9. WALL MOUNTED KNOX BOX AS REQUIRED BY BIRMINGHAM TECHNICAL CODE. IF REQUIRED, G.C. SHALL INSTALL CONDUIT/ WIRING TO KNOX BOX.
10. 16"X20" ALUMINUM ACCESS HATCH. KARP UNIVERSAL FLUSH ACCESS DOOR #DSC-214M; OR EQUAL. PAINT TO MATCH CEILING 'P-4'.
11. EXISTING SPRINKLER SYSTEM TO REMAIN. SEE NOTE #4.

## CEILING PLAN GENERAL NOTES

1. SUSPENDED CEILING HEIGHTS INDICATED ARE TO FINISH. GYPSUM CEILING HEIGHTS ARE TO FACE OF FRAMING OR AS OTHERWISE DETAILED - VERIFY ALL HEIGHTS IN FIELD PRIOR TO COMMENCING WORK - REPORT ANY DISCREPANCIES TO ARCHITECT.

2. G.C. TO COORDINATE ROOFING TYPE & SPECIFICATIONS W/ LL. CONFIRM WITH LL IF SPECIFIC SUBS SHOULD BE UTILIZED SUCH AS ROOFING, SPRINKLER, ETC.

3. SEE SHT. A2.0 FOR FINISH SCHEDULE AND CEILING FINISH SPECIFICATIONS.

4. FIRE SPRINKLER SYSTEM IS EXISTING AND SHALL REMAIN.. G.C. SHALL TURN DOWN/ EXTEND SPRINKLER SUPPLY LINES AND PLACE SPRINKLER HEADS AT CEILING HEIGHT AS REQUIRED PER CODE. SPRINKLER HEADS MUST BE SIMI-RECESSED MOUNTED HEADS OR FULLY RECESSED WITH COVER PLATES. G.C. SHALL NOT RELOCATE EXISTING SPRINKLER HEADS LATERALLY MORE THAN 6" FROM EXISTING LOCATION. G.C. TO SUBMIT SPRINKLER SHOP DRAWINGS AND SPECIFICATIONS TO BIRMINGHAM FIRE AND RESCUE DEPARTMENT FOR PERMITTING.

5. BUILDING AND TENANT AREA FIRE ALARM SYSTEM IS EXISTING AND SHALL REMAIN. EXISTING SYSTEM; SIMPLEX 4100 ES.. G.C. TO SUBMIT SHOP DRAWINGS TO BIRMINGHAM FIRE AND RESCUE DEPARTMENT AS REQUIRED FOR PERMITTING.

THE CONTENTS OF THIS DRAWING WILL REMAIN THE PROPERTY OF THOMAS F. TEDROW, AIA. IT'S CONTENTS INCLUDING ALL INFORMATION, SHALL NOT BE REPRODUCED USING ANY MEANS WITHOUT EXPRESSED WRITTEN CONSENT AND/OR PERMISSION FROM THOMAS F. TEDROW, AIA

ARCHITECT/ENGINEER STAMP

THOMAS F. TEDROW, AIA
ARCHITECT
2866 ADAMS BROOK WAY
SNELLVILLE, GA 30078
PH. 678.777.5548
E-MAIL: tom.tedrow@tedrowdesign.com

YOUR PIE
PROMINENCE SHOPS AT LIBERTY PARK
8000 LIBERTY PARKWAY
VESTAVIA HILLS, ALABAMA 35242

| REV. NO. | DATE | DESCRIPTION |
|---|---|---|
| | | |

PROJECT NO: YPAL-07
DRAWN BY: DLM
CHECKED BY: TT
ISSUE DATE: 08-12-16

REFLECTED CEILING PLAN

A1.2

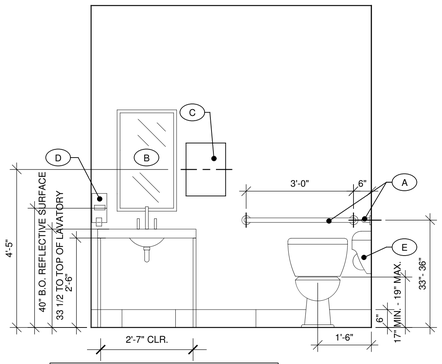


NOTE: H.W. SUPPLY & WASTE LINES SHALL BE INSULATED PER H.C. CODES.

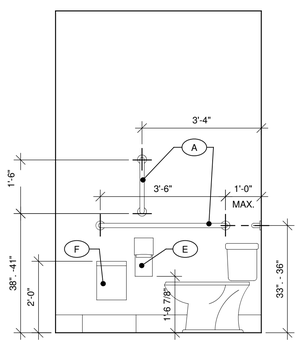


NOTE: TYPICAL RR ELEV. FOR EQUIPMENT HEIGHTS ONLY. SEE A3.1 FOR ACTUAL R.R. ELEVATIONS.

## GENERAL NOTES

1. G.C. TO FURNISH AND INSTALL SCHEDULED TOILET ACCESSORIES IN RESTROOMS.

2. G.C. SHALL INSTALL TOILET ACCESSORIES FURNISHED BY OWNER. SEE ACCESSORIES SCHEDULE.

3. PROVIDE WOOD BLOCKING AT ALL WALL-HUNG ITEMS.

4. ALL ACCESSORIES MUST BE ADA COMPLIANT.

5. VERIFY MOUNTING HEIGHT OF TOILET TISSUE HOLDER PRIOR TO MOUNTING. HEIGHT MAY VARY DEPENDING ON UNIT FURNISHED BY OWNER.

6. G.C. TO INSTALL PREFABRICATED VANITY MILLWORK AND PROVIDE BLOCKING FOR WALL ATTACHMENT PER 'MADE IN MONROE' SPECIFICATIONS. SEE EQ1.0 FOR 'C-8' RESTROOM MILLWORK/ VANITY / SINK SPECIFICATIONS.

## ACCESSIBILITY NOTES

1. G.C. SHALL PROVIDE HANDICAP CODE COMPLIANT MEN'S & WOMEN'S DOOR SIGNAGE. SIGNS SHALL BE MOUNTED ON EXTERIOR SIDE (AS SHOWN ON INTERIOR ELEVATIONS) AND SHALL INCLUDE THE INTERNATIONAL SYMBOL OF ACCESSIBLITY.

2. FLUSH AND FAUCETS CONTROLS SHALL BE OPERABLE w/ONE HAND AND SHALL NOT REQUIRE TIGHT GRASPING OR TWISTING OF WRIST. THE FORCE TO ACTIVATE THESE CONTROLS SHALL NOT EXCEED 5 LBS.

3. FLUSH CONTROLS FOR TOILETS (AND URINALS WHEN APPLICABLE) SHALL BE MOUNTED ON THE WIDE SIDE OF THE TOILET NO HIGHER THAN 44" A.F.F.

4. GRAB BARS SHALL NOT ROTATE WITHIN THEIR FITTINGS AND SHALL BE INSTALLED TO WITHSTAND A LOAD OF 250 LBS. OR GREATER.

## CLEAR FLOOR AREA

| | |
|---|---|
| A | 5' DIA. TURNING RADIUS |
| B | LAVATORY - 30" x 48" |
| C | TOILET - 56" x 60" |
| D | DOOR - 54" X 60" - PULL SIDE |
| E | DOOR - 48" X 48" - PUSH SIDE |
| F | DOOR - 60" x 48" - PULL SIDE |

## FINISH SCHEDULE

| DESCRIPTION | TAG | MATERIAL | MANUFACTURER | SIZE | PATTERN AND COLOR | GROUT | LOCATION | REMARKS |
|---|---|---|---|---|---|---|---|---|
| FLOORING | FF-1 | POLISHED CONCRETE | CONSOLIDECK LS&LS GAURD | - | TOP COAT DENSIFIER-CONSOLIDECK LS GUARD-CONSOLIDECK LS GAURD. SEE CONCRETE NOTE BELOW. | | DINING, RR | SEE NOTE BELOW |
| | FF-2 | PORCELAIN TILE | CREATIVE MATERIALS CORP-CMC | 8"X8" | OBIDOS MATTE - JET | 1/4" GROUT: LATICRETE-DUSK GREY | KITCHEN (B.O.H.) | CMC - DOUG SALATINO : 518.713.5371 |
| | FF-3 | PORCELAIN TILE | CREATIVE MATERIALS CORP-CMC | 1"X1" HEXAGONAL | BLACK AND WHITE MIX WITH BLACK AND WHITE BORDER TILE. | 1/16" GROUT: MAPEI ULTRACOLOR PLUS - CHARCOAL/ 25 LBS UNIT | RESTROOMS | CMC - DOUG SALATINO : 518.713.5371 |
| | | | | | | | | |
| MILLWORK | M-1 | NOT USED | - | - | - | - | - | |
| | M-2 | COUNTERTOP | SILESTONE | | LYRA | | MW COUNTERTOPS | |
| STAINS | WS-1 | STAIN | M.L. CAMPBELL | | STAIN COLOR TO MATCH WILSONART #7943 COLUMBIAN WALNUT - 2 COATS | | BAR TOPS/ DOORS AS SCHEDULED | USED ON ALL WOOD - BASE, DOORS,ETC. PER PLANS |
| PAINT | P-1 | PAINT | BENJAMIN MOORE | | BROOKLYN BEIGE HC-47 - EGGSHELL | | DINING RM, RR | |
| | P-2 | PAINT | BENJAMIN MOORE | | DEEP ROSE 2004-10 - EGGSHELL | | MAIN SOFFIT,ACCENT WALLS PER PLAN | |
| | P-3 | PAINT | BENJAMIN MOORE | | BLACK - 2132-10 - FLAT; GLOSSY AT DOOR FRAMES | | OPEN CEILING, WALL ABOVE 12'-0"/ DOOR FRAMES | FLAT USED ON ALL EXPOSED STEEL AND UTILITIES, EXCLUDING DUCTWORK ABOVE 12'-0" AFF.. GLOSSY USED AT DOOR RESTROOM AND KITCHEN (B.O.H.) DOOR FRAME. |
| | P-4 | PAINT | BENJAMIN MOORE | | #2137-70 WHITE WISP - SEMI-GLOSS (WASHABLE) IN OPEN KITCHEN | | OPEN KITCHEN, RR KITCHEN DOORS, OFFICE | |
| | | | | | | | | |
| WALL FINISH | W-1 | BRICK WALL FINISH | TOPTILE BRICK VENEER | 2.36"x7.48" RUNNING BOND | 22330 ROCCO - STAGGER BRICKS TO CREATE CORNERS - WITH SHERWIN WILLIAMS CLEAR MASONRY SEALER | LATICRETE SANDED #38 RIVER ROCK GROUT | OVEN, DINING WALL PER PLAN | ProTech Spec Resources, Inc - ERIN GITTERE 615-308-3799 egittere@protechspec.com |
| | W-2 | BRICK WALL FINISH | TOPTILE BRICK VENEER | 2.36"x7.48" RUNNING BOND | 20801 WHITE - STAGGER BRICKS TO CREATE CORNERS | CUSTOM BUILDING PRODUCTS:SANDED #01 SNOW WHITE GROUT | ACCENT WALLS PER PLAN | ProTech Spec Resources, Inc - ERIN GITTERE 615-308-3799 egittere@protechspec.com |
| | W-3 | WOOD CHAIR RAIL | FIR | 5" X 3/4" | FIR WOOD - STAIN TO MATCH WS-1 | | DINING RM PER PLANS | G.C. RESPONSIBLE |
| | W-4 | SANITARY WALL FRP | MARLITE | FRP / P100-FR | WHITE, 48" X 120" OR MATCH EXISTING | | BACK OF HOUSE | PEBBLE |
| | | | | | | | | |
| RESTROOM WALL TILE | WT-1 | PORCELAIN TILE | CREATIVE MATERIALS CORP | 3"x6" | WHITE ICE - GLOSSY | MAPEI ULTRACOLOR PLUS: CHARCOAL #47 GROUT 25/LBS UNIT JOINT SIZE 1/16" | RESTROOM WALL TO 5'-0"AFF | CMC - DOUG SALATINO : 518.713.5371 |
| | | | | | | | | |
| WALL BASE | B-1 | PORCELAIN TILE BASE | CMC | 4" | OBIDOS MATTE - JET | | OPEN KITCHEN, BOH, INSIDE OF MW | CMC - DOUG SALATINO : 518.713.5371 |
| | B-2 | STAINED WOOD BASE | FIR | 6" | FIR WOOD - STAIN TO MATCH WS-1 | | DINING, RR | |
| | B-3 | VINYL COVE BASE | JOHNSONITE | 4" | #63 BURNT UMBER | | OPEN KITCHEN, BOH, INSIDE OF MW WHEN USING FF-1 | |
| | B-4 | PORCELAIN TILE-WALL COVE BASE | CREATIVE MATERIALS CORP - CMC | 3"X 6" STARTER TILE | WHITE ICE - GLOSSY | MAPEI ULTRACOLOR PLUS: CHARCOAL #47 GROUT 25/LBS UNIT JOINT SIZE 1/16" | RR | CMC - DOUG SALATINO : 518.713.5371<br>** USE SCHLUTER COVE - SEE ABOVE |
| CEILINGS | ACT-1 | ACOUSTICAL CLG. TILE | USG | 24" X 48" OR 24" X 24" SEE PLANS | CLIMAPLUS #3260 LAY-IN CEILING TILE. VINYL COATED AND WASHABLE. USDA APPROVED. COLOR: WHITE; GRID COLOR: WHITE | | BOH | |
| | ACT-2 | ACOUSTICAL CLG. TILE | ARMSTRONG | 24" X 24" | METALLAIR COLLECTION LARGE PANEL METAL. ITEM #5422505LLS LAY-IN CEILING TILE. LACQUERED STEEL | | OPEN KITCHEN | |
| | GYP | GYPSUM BOARD | - | | PAINTED P-1 - SEMI-GLOSS IN RR AND KITCHEN AREAS | | RR CLGS | |
| | OPEN | OPEN TO STRUCTURE | - | | PAINTED P-3 - FLAT | | DINING | EXPOSED STEEL, DECK, UTILITIES EXCLUDING MECHANICAL DUCTWORK TO BE PAINTED 'P-3' |
| | | | | | | | | |

CONCRETE NOTE: GRIND FLOOR WITH 50M, 120M FOLLOWED BY 100 CERAMIC, 100 RESIN, 200 RESIN. DENSIFIER WILL BE USED AFTER CERAMIC CUT AND FINAL GUARD PRODUCT TO FINAL POLISH WITH PROPANE BURNISHER. EPOXY COATING IN CLEAR COLOR TO BE APPLIED TO RESTROOMS PER GC REQUIREMENT.

## RESTROOM ACCESSORIES SCHEDULE

| MARK | ITEM | MANUFACTURER | MODEL NO.# | MOUNTING HEIGHTS |
|---|---|---|---|---|
| A | GRAB BARS | KOHLER (OR EQUAL) | K-11895 & K-11896 | |
| B | MIRROR | 'MADE IN MONROE' | CUSTOM | 40" AFF. TO B.O. MIRROR |
| C | PAPER TOWEL DISPENSER | CINTAS ; SIGNATURE SERIES | #27012; Z-FOLD; BLACK | 4'-0" A.F.F. TO DISPENSER |
| D | LIQUID SOAP DISPENSER | CINTAS ; SIGNATURE SERIES | #27069; AUTOMATIC; BLACK | 34"-48" (2'-10" TO 4'-0") A.F.F. TO DISPENSER |
| E | TOILET PAPER HOLDER | CINTAS ; SIGNATURE SERIES | COLOR: BLACK | -6" A.F.F. TO DISPENSER |
| F | NAPKIN DISPOSAL | BOBRICK (OR EQUAL) | B-270 | 24" A.F.F. TO TOP |
| G | WASTE RECEPTACLE; WALL MOUNTED | CINTAS ; SIGNATURE SERIES | #27108; COLOR: BLACK | 34" AFF. TO T.O. RECEPTACLE |

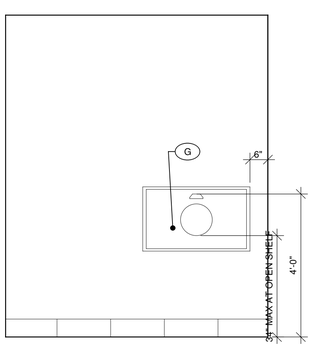


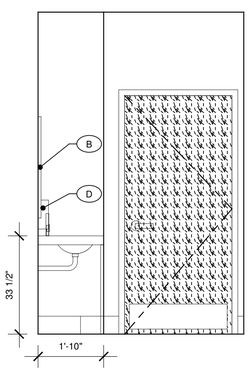


4 A2.0 TYPICAL RESTROOM ELEVATIONS
1/2" = 1'-0" (SEE SHT. A3.1 FOR SPECIFIC R.R. ELEVATIONS)

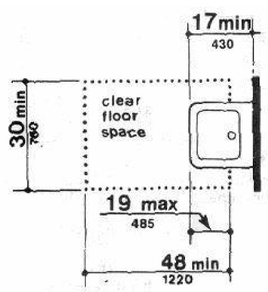


Figure 32
Clear Floor Space at Lavatories

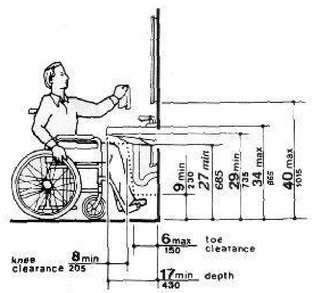


Figure 31
Lavatory Clearances

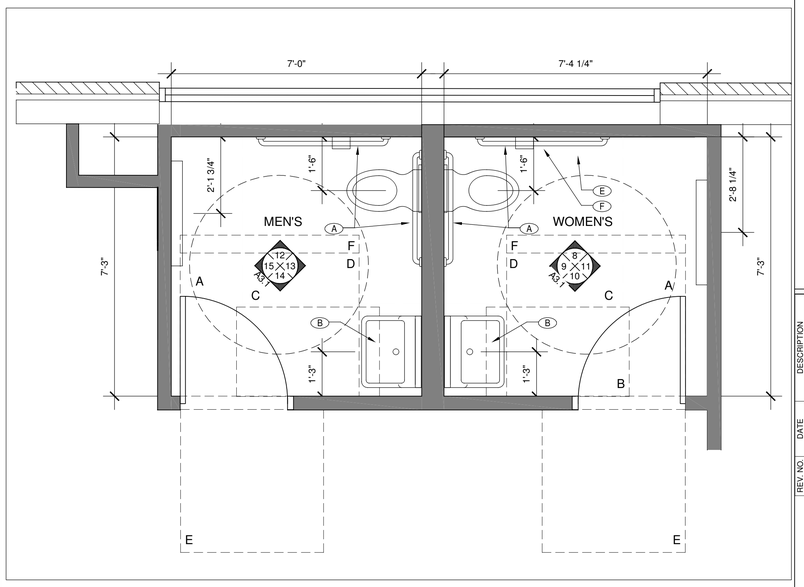


1 A2.0 ENLARGED RESTROOM PLAN - MEN'S & WOMEN'S
1/2" = 1'-0"

THE CONTENTS OF THIS DRAWING WILL REMAIN THE PROPERTY OF THOMAS F. TEDROW, AIA. IT'S CONTENTS INCLUDING ALL INFORMATION, SHALL NOT BE REPRODUCED USING ANY MEANS WITHOUT EXPRESSED WRITTEN CONSENT AND/OR PERMISSION FROM THOMAS F. TEDROW, AIA

ARCHITECT/ENGINEER STAMP

THOMAS F. TEDROW, AIA
ARCHITECT
2966 ADAMS BROOK WAY
SNELLVILLE, GA 30078
PH: 678.777.5548
E-MAIL: tom.tedrow@tedrowdesign.com

YOUR PIE
PROMINENCE SHOPS AT LIBERTY PARK
8000 LIBERTY PARKWAY
VESTAVIA HILLS, ALABAMA 35242

| REV. NO. | DATE | DESCRIPTION |
|---|---|---|
| | | |

PROJECT NO: YPAL-07
DRAWN BY: DLM
CHECKED BY: TT
ISSUE DATE: 08-12-16

FINISH SCHED. - R.R. DETAILS

A2.0

# DOOR SCHEDULE

| MARK | TYPE | LOCATION | DOOR SIZE | DOOR MATERIAL | DOOR GLASS | FRAME MATERIAL | FRAME TYPE | DETAILS HEAD/JAMB/THRE. | | | FINISHES INSIDE/OUTSIDE | | HDWR. SET | REMARKS |
|---|---|---|---|---|---|---|---|---|---|---|---|---|---|---|
| 1 | - | ENTRANCE - EXISTING | (PR.) 3'-0" x 7'-0" X 1¾" | - | - | - | - | - | - | - | - | - | | SEE GEN. NOTES AND GEN. NOTES 14, 15. |
| 2 | - | ENTRANCE - EXISTING | 3'-0" x 7'-0" X 1¾" | - | - | - | - | - | - | - | - | - | | SEE GEN. NOTES AND GEN. NOTES 14, 15. |
| 3 | - | ENTRANCE - EXISTING | 3'-0" x 7'-0" X 1¾" | - | - | - | - | - | - | - | - | - | | SEE GEN. NOTES AND GEN. NOTES 14, 15. |
| 4 | - | EXISTING | 3'-0" x 7'-0" X 1¾" | HOLLOW MTL. | - | HOLLOW MTL. | - | - | - | - | - | - | | SEE GEN. NOTES |
| 5 | D | MEN'S | 3'-0" x 7'-0" x 1 3/4" | S.C. WOOD | NONE | HOLLOW MTL. | 5 7/8" KNOCK-DOWN | 1/A2.1 | 2/A2.1 | - | P-4 | P-4 | A | SEE GEN. NOTES |
| 6 | D | WOMEN'S | 3'-0" x 7'-0" x 1 3/4" | S.C. WOOD | NONE | HOLLOW MTL. | 5 7/8" KNOCK-DOWN | 1/A2.1 | 2/A2.1 | - | P-4 | P-4 | A | SEE GEN. NOTES |
| 7 | D | OFFICE | 3'-0" x 7'-0" x 1 3/4" | S.C. WOOD | NONE | HOLLOW MTL. | 5 7/8" KNOCK-DOWN | 1/A2.1 | 2/A2.1 | - | P-4 | P-4 | P-4 | P-4 B SEE GEN. NOTES |
| 8 | C | PREP AREA | (1) 2'-10" x 7'-0" | ABS/PVC | 9" X 14" ACRYLIC | HOLLOW MTL. | 5 7/8" KNOCK-DOWN | 3/A2.1 | 4/A2.1 | - | PLATINUM LAM. | PLATINUM LAM. | C | SEE GEN. NOTES |
| | | | | | | | | | | | | | | |
| | | | | | | | | | | | | | | |

# GENERAL DOOR NOTES

1. ALL HARDWARE SHALL BE FURNISHED AND INSTALLED BY THE GENERAL CONTRACTOR UNLESS NOTED OTHERWISE.

2. SEE HARDWARE SETS FOR REQ'D. FINISHES.

3. ALL DOORS TO BE KEYED ALIKE.

4. HOLLOW METAL FRAMES SHALL BE 16 GA. STEEL.

5. ALL DOORS SHALL HAVE ADA APPROVED TYPE HARDWARE (VERIFY IN FIELD).

6. EXIT HARDWARE SHALL COMPLY WITH ALL APPLICABLE CODES.

7. THE MAXIMUM DIMENSION FROM THE TOP OF THE THRESHOLD TO THE EXTERIOR LANDING @ EXISTING DOORS SHALL NOT EXCEED 1/2". (VERIFY IN FIELD)

8. ALL GLAZING IN DOORS AND WITHIN A 24" ARC OF THE SIDES OF EGRESS DOORS SHALL BE OF AN APPROVED SAFETY TYPE. (VERIFY IN FIELD)

9. PAINT HOLLOW METAL FRAMES & DOORS WHERE SCHEDULED w/2 FINISH COATS OF HIGH-GLOSS ACRYLIC ENAMEL. SEE ELEVATIONS & FINISH SCHEDULE.

10. PROVIDE SIGNS @ EXIST. GLASS DOORS TO READ, "THIS EXIT MUST REMAIN UNLOCKED WHEN THIS BUILDING IS OCCUPIED. LETTERS SHALL BE 1" TALL & MOUNTED ON CONTRASTING BACKGROUND.

11. ADJUST CLOSERS SUCH THAT SWEEP PERIOD FROM AN OPEN POSITION OF 70 DEGREES, THE DOORS SHALL TAKE AT LEAST 3 SECONDS TO MOVE TO A POINT 3" FROM THE LATCH, MEASURED TO THE LEADING EDGE OF DOOR. MAXIMUM OPENING FORCE OF DOORS SHALL BE 5 LBF.

12. DOOR DETAILS DO NOT DEPICT ALL INTERIOR FINISHES. REFER TO INTERIOR ELEVATIONS & FINISH MATERIAL SCHEDULE FOR REQUIRED FINISHES.

13. NEW STOREFRONT AS PART OF THE SCOPE OF THIS PROJECT, ARE SCHEDULED AROUND KAWNEER PRODUCTS. FIELD VERIFY EXISTING STOREFRONT SYSTEM & MATCH EXISTING. CROSS REFERENCE SPECIFIED PRODUCTS TO EQUIVALENT EXISTING STOREFRONT MANUFACTURER'S PRODUCTS.

14. AT NEW STOREFRONT DOORS AND HARDWARE INCLUDED IN THE SCOPE OF THIS PROJECT; HARDWARE FINISHES AT NEW STOREFRONT DOORS SHALL MATCH THE EXISTING STOREFRONT COLOR/FINISH. (VERIFY IN FIELD) SEE DWG 1/A1.0 FOR PROJECT SCOPE.

15. G.C. TO VERIFY PANIC HARWARE AT EXISTING STOREFRONT DOORS COMPLIES WITH CODE REQUIREMENTS FOR EGRESS AND IF DOES NOT CONFORM WITH CODE- REQUIRED HARDWARE, THEN SHALL INSTALL PANIC HARDWARE .

16. G.C. SHALL FIELD VERIFY EXISTING DOOR CONFORMS WITH DOOR SCHEDULE. G.C. SHALL REPLACE EXISTING DOOR WITH SOLID CORE WOOD IF REQUIRED.

17. G.C. SHALL FIELD VERIFY HARDWARE AT EXISTING DOOR AND IF HARDWARE DOES NOT CONFORM WITH HARDWARE SET PER DOOR SCHEDULE, THEN G.C. SHALL INSTALL NEW HARDWARE SET AS SPECIFIED.

# DOOR TYPES

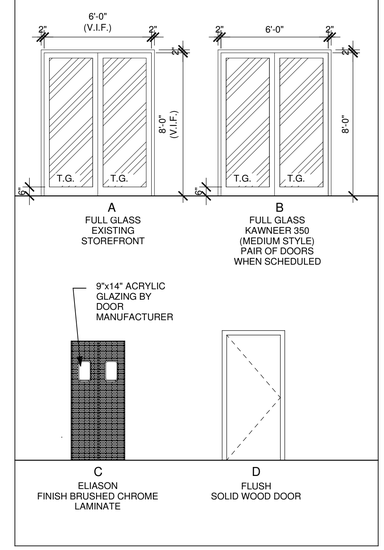


A
FULL GLASS
EXISTING
STOREFRONT

B
FULL GLASS
KAWNEER 350
(MEDIUM STYLE)
PAIR OF DOORS
WHEN SCHEDULED

C
ELIASON
FINISH BRUSHED CHROME
LAMINATE

D
FLUSH
SOLID WOOD DOOR

# DOOR HARDWARE

SET A. LOCKSET: SCHLAGE BED/BATHROOM LOCK #D40S WITH ATHENS LEVER HANDLE

HINGES: HAGER BB1279 - 4 1/2 X 4 1/2, 1 1/2 PAIR -FINISH BRUSHED CHROME

PROTECTION PLATE: HAGER #190S 8" H KICK PLATE (PUSH SIDE)

CLOSER: LCN #1460

** G.C. TO PROVIDE AND INSTALL COAT HOOK INTERIOR SIDE

SET B. LOCKSET: SCHLAGE ENTRANCE/OFFICE LOCK #D35S WITH ATHENS LEVER HANDLE

HINGES: HAGER BB1279 - 4 1/2 X 4 1/2, 1 1/2 PAIR

PROTECTION PLATE: HAGER #190S 8" H KICK PLATE (PUSH SIDE)

CLOSER: LCN #1460

SET C. ELIASON LWP-6 - ALL DOOR HARDWARE PROVIDED BY DOOR MANUFACTURER

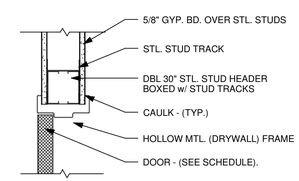


1 DOOR HEAD DETAIL - H.M.
1 1/2" = 1'-0"

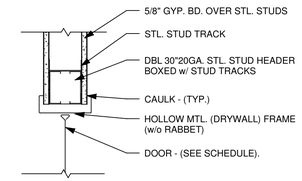


3 DOOR HEAD DETAIL
1 1/2" = 1'-0"

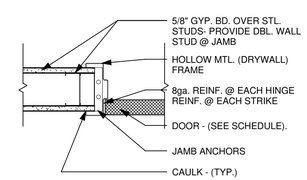


2 DOOR JAMB DETAIL - H.M.
1 1/2" = 1'-0"

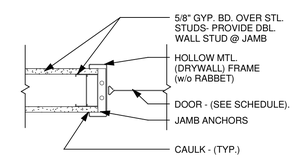


4 DOOR JAMB DETAIL
1 1/2" = 1'-0"

THE CONTENTS OF THIS DRAWING WILL REMAIN THE PROPERTY OF THOMAS F. TEDROW, AIA. IT'S CONTENTS INCLUDING ALL INFORMATION, SHALL NOT BE REPRODUCED USING ANY MEANS WITHOUT EXPRESSED WRITTEN CONSENT AND/OR PERMISSION FROM THOMAS F. TEDROW, AIA

ARCHITECT/ENGINEER STAMP

THOMAS F. TEDROW, AIA
ARCHITECT
2866 ADAMS BROOK HWY
SNELLVILLE, GA 30078
PH. 678 777 5548
E-MAIL: tom.tedrow@tedrowdesign.com

YOUR PIE
PROMINENCE SHOPS AT LIBERTY PARK
8000 LIBERTY PARKWAY
VESTAVIA HILLS, ALABAMA 35242

| REV. NO. | DATE | DESCRIPTION |
|---|---|---|
| | | |

PROJECT NO: YPAL-07
DRAWN BY: DLM
CHECKED BY: TT
ISSUE DATE: 08-12-16

DOOR/WIN SCHED. & DETAILS

A2.1

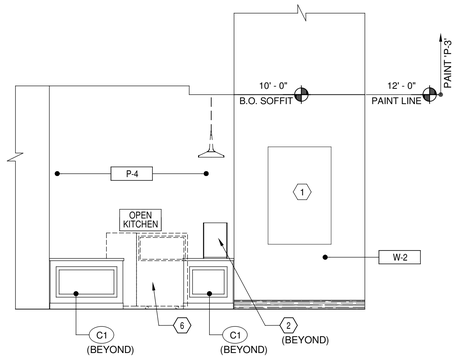


1 A3.0 ELEV. @ DINING/MENU WALL
1/4" = 1'-0"

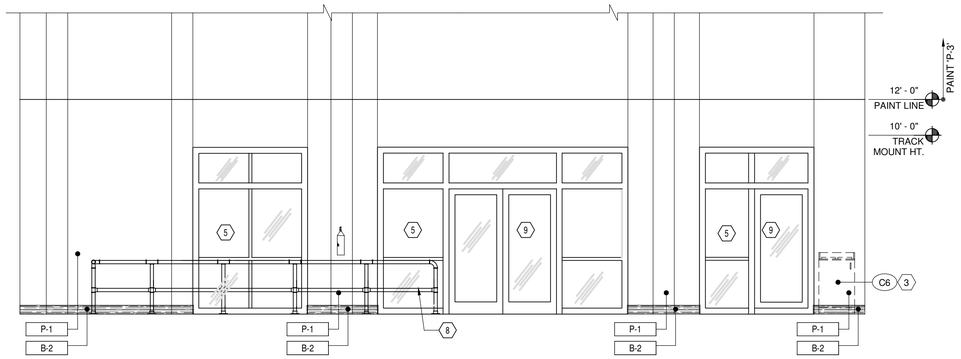


2 A3.0 ELEV. @ DINING/ STOREFRONT
1/4" = 1'-0"

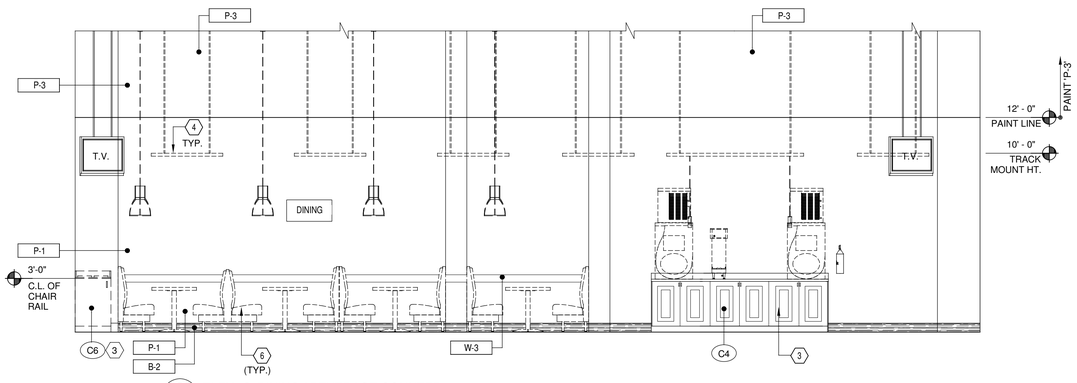


3 A3.0 ELEV. @ DINING / BEVERAGE COUNTER
1/4" = 1'-0"

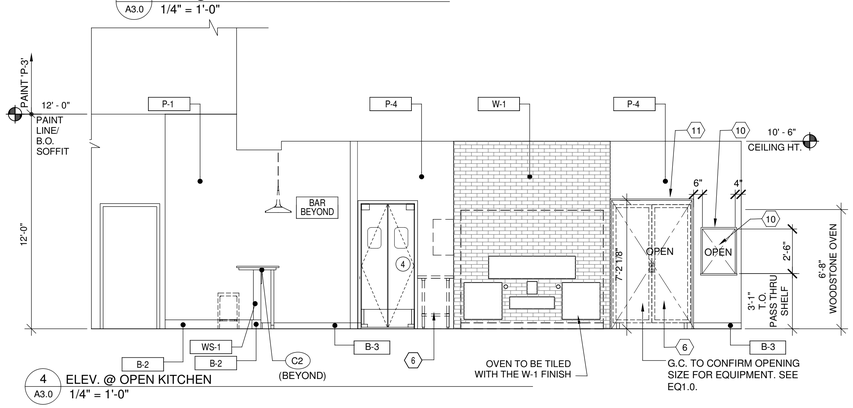


4 A3.0 ELEV. @ OPEN KITCHEN
1/4" = 1'-0"

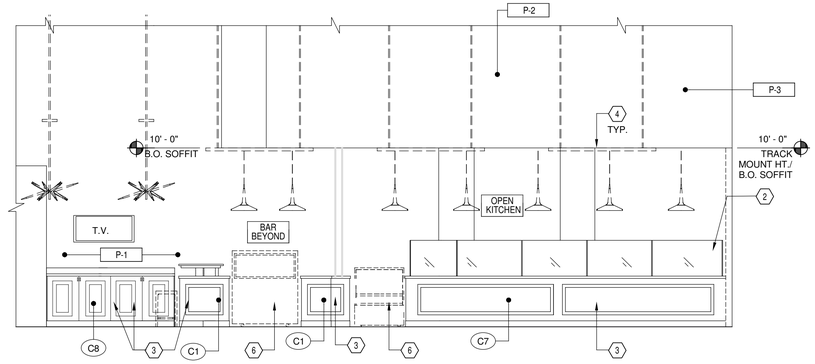


5 A3.0 ELEV. @ QUEUING / SERVICE COUNTER
1/4" = 1'-0"

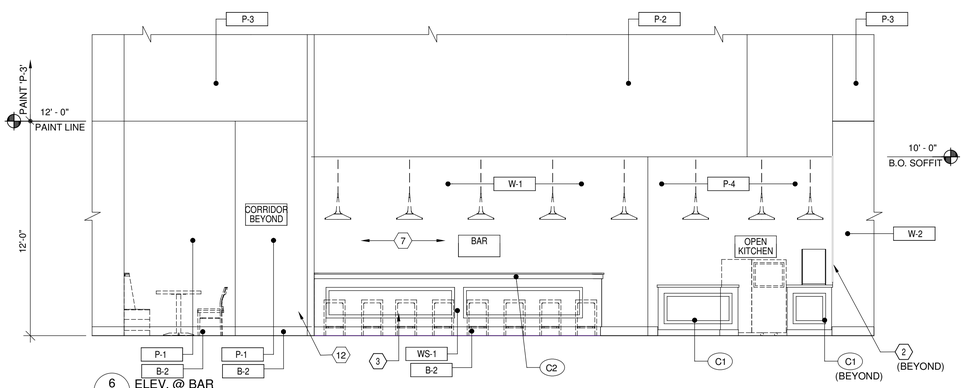


6 A3.0 ELEV. @ BAR
1/4" = 1'-0"

## INTERIOR ELEVATION KEY NOTES (#)

1. MENU BOARDS. SIZES TO BE DETERMINED.
2. SNEEZE GUARDS w/SAFETY GLASS. SEE EQUIPMENT SCHEDULE, SHT. EQ1.0.
3. CASEWORK - SEE CASEWORK SCHEDULE ON SHEET EQ1.0 AND MILLWORK DETAILS SHEET A4.0
4. TRACK MOUNT LIGHTING, TYP.. TRACK MOUNTED AT 10'-0" AFF.- SEE A1.3.
5. EXISTING STOREFRONT TO REMAIN. SEE SHT. A2.1 DOOR SCHEDULE FOR FURTHER DIRECTIION RE: EXISTING STOREFRONT DOORS.
6. EQUIPMENT AND FURNITURE. SEE EQ1.0 FOR EQUIPMENT PLAN & SCHEDULE
7. OWNER FURNISHED 'YOUR PIE' WALL MURAL
8. QUEUE BARS, SEE QUEING RAIL DETAIL ON SHEET A1.0
9. EXISTING STOREFRONT DOORS TO REMAIN. SEE DOOR SCHEDULE, SHT. A2.1.
10. PASS THROUGH OPENING(1'-10"W X 2;-6"H). FINISH FRAMED OPENING WITH S.S. TRIM. SEE DETS. 4 & 13/A4.0.
11. WALL OPENING FOR REFRIGERATOR (SEE EQ1.0). FINISH OPENING WITH S.S. TRIM. SEE DET. 4/A4.0
12. H.C. ACCESSIBLE BAR. 60" W X 34" H. SEE 8 & 9/ A4.0.

## GENERAL NOTES

1. PROVIDE BLOCKING FOR SHELVING, GRAB BARS, TOILET ACCESORIES & MILLWORK IN RESTROOMS. REFER TO SHEET A2.0 FOR INFORMATION.
2. REFER TO SHEET A2.0 FINISH, MATERIAL AND RESTROOM ACCESSORIES SCHEDULES.
3. REFER TO SHEET EQ.1 FOR EQUIPMENT & SEATING INFORMATION.
4. G.C. SHALL VERIFY SIZE AND FIT OF EQUIPMENT PRIOR TO INSTALLATION.
5. IN DINING AND CORRIDOR WITH OPEN CEILINGS, G.C. TO PAINT ALL WALLS, STEEL, STEEL DECK, EXPOSED UTILITIES ABOVE 11'-6" AFF. BLACK- 'P-3'. G.C. SHALL NOT PAINT MECHANICAL DUCTWORK. SEE MECHANICAL DRAWINGS.

THE CONTENTS OF THIS DRAWING WILL REMAIN THE PROPERTY OF THOMAS F. TEDROW, AIA. IT'S CONTENTS INCLUDING ALL INFORMATION, SHALL NOT BE REPRODUCED USING ANY MEANS WITHOUT EXPRESSED WRITTEN CONSENT AND/OR PERMISSION FROM THOMAS F. TEDROW, AIA

STATE OF ALABAMA
THOMAS F. TEDROW
0290
REGISTERED ARCHITECT
ARCHITECT/ENGINEER STAMP

YOUR PIE

THOMAS F. TEDROW, AIA
ARCHITECT
2866 ADAMS BROOK WAY
SNELLVILLE, GA 30078
PH. 678.777.9548
E-MAIL: tom.tedrow@tedrowdesign.com

YOUR PIE
PROMINENCE SHOPS AT LIBERTY PARK
8000 LIBERTY PARKWAY
VESTAVIA HILLS, ALABAMA 35242

| REV. NO. | DATE | DESCRIPTION |
|---|---|---|

PROJECT NO: YPAL-07
DRAWN BY: DLM
CHECKED BY: TT
ISSUE DATE: 08-12-16

INTERIOR ELEVATIONS

A3.0

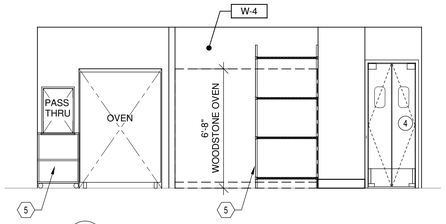


1 A3.1 ELEV. @ KITCHEN (B.O.H.)
1/4" = 1'-0"

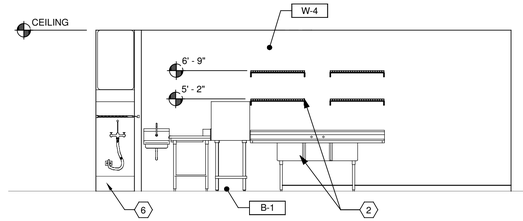


2 A3.1 ELEV. @ KITCHEN (B.O.H.)
1/4" = 1'-0"

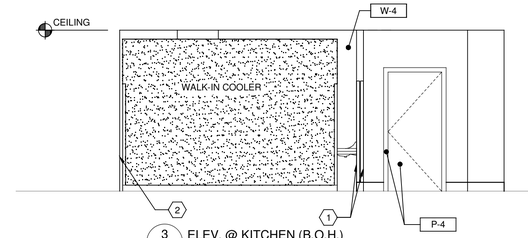


3 A3.1 ELEV. @ KITCHEN (B.O.H.)
1/4" = 1'-0"

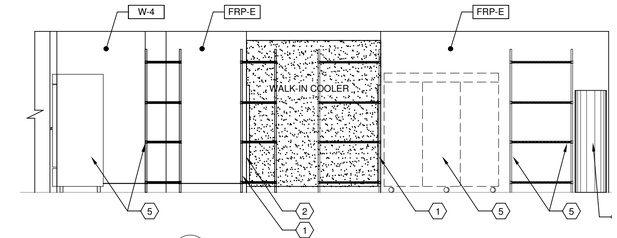


4 A3.1 ELEV. @ KITCHEN (B.O.H.)
1/4" = 1'-0"

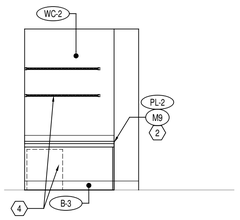


16 A3.1 ELEV. @ OFFICE
1/4" = 1'-0"

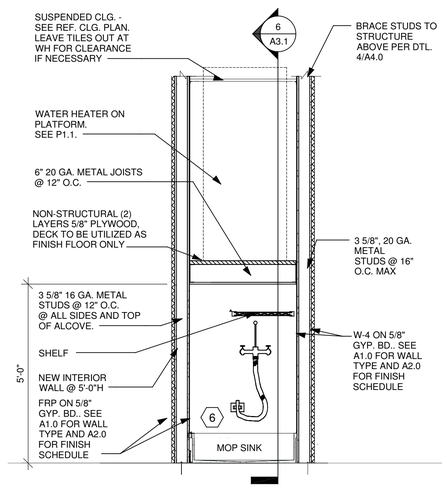


5 A3.1 CAN WASH AND HWH PLATFORM SECTION
1/2" = 1'-0"

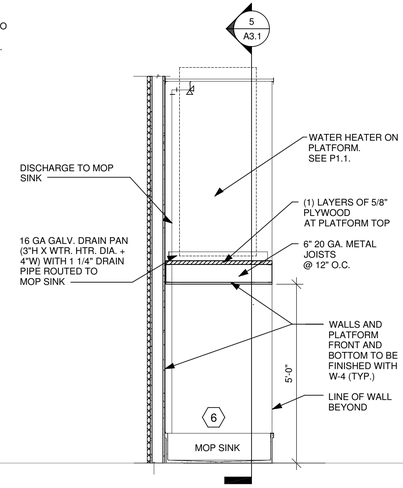


6 A3.1 CAN WASH AND HWH PLATFORM SECTION
1/2" = 1'-0"

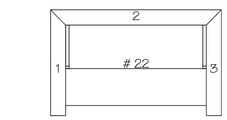


Plan View
Scale: 3/4" = 1'

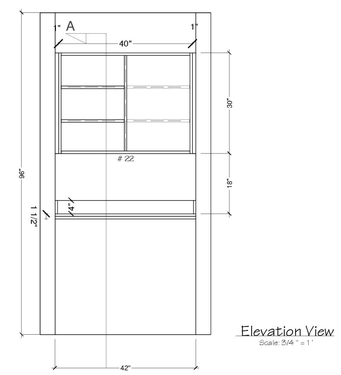


Elevation View
Scale: 3/4" = 1'

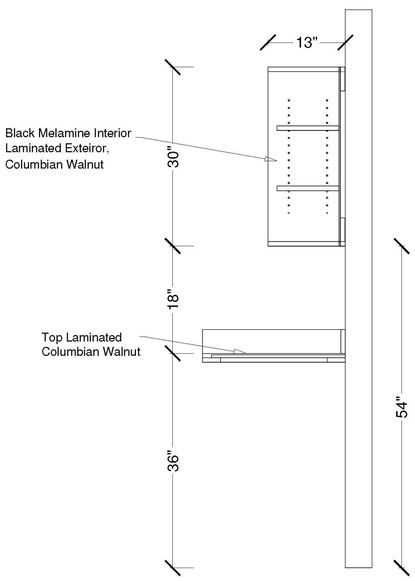


7 A3.1 OFFICE DESK ('C5') AND CABINET MILLWORK ('C3') DETAILS
VARIES

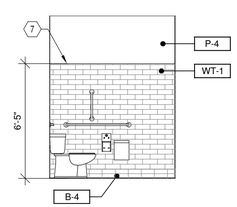


8 A3.1 ELEV. @ WOMEN'S RR
1/4" = 1'-0"

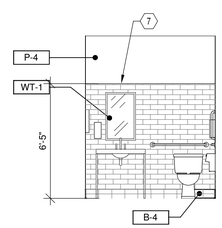


9 A3.1 ELEV. @ WOMEN'S RR
1/4" = 1'-0"

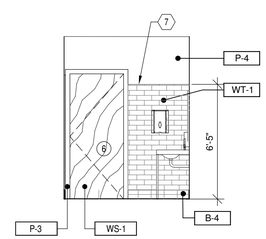


10 A3.1 ELEV. @ WOMEN'S RR
1/4" = 1'-0"

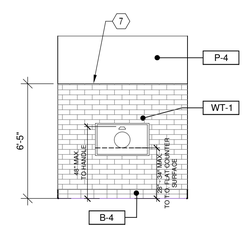


11 A3.1 ELEV. @ WOMEN'S RR
1/4" = 1'-0"

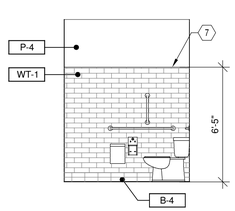


12 A3.1 ELEV. @ MEN'S RR
1/4" = 1'-0"

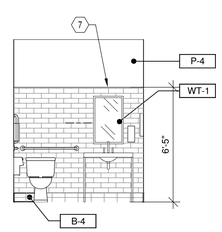


13 A3.1 ELEV. @ MEN'S RR
1/4" = 1'-0"

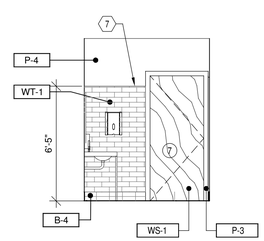


14 A3.1 ELEV. @ MEN'S RR
1/4" = 1'-0"

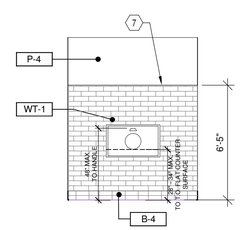


15 A3.1 ELEV. @ MEN'S RR
1/4" = 1'-0"

## INTERIOR ELEVATION KEY NOTES

1. PROVIDE 6' TALL 18 GA. STAINLESS STL. CORNER GUARD FROM TOP OF BASE
2. CLOSURE CORNER TRIM TO MATCH WALK-IN COOLER. FURNISHED AND INSTALLED BY KITCHEN EQUIPMENT SUPPLIER.
3. 'C5' MILLWORK: OFFICE DESK. SEE DET. 7/A3.1. SEE EQ1.0 EQUIPMENT PLAN AND SCHEDULE
4. 'C3' WALL MOUNTED DESK SHELVING. SEE DET.5/A3.1. SEE EQ1.0 EQUIPMENT PLAN AND SCHEDULE
5. KITCHEN EQUIPMENT - SEE EQ1.0
6. MOP SINK WITH WATER HEATER PLATFORM ABOVE. SEE 5 & 6 /A3.1. SEE PLUMBING DRAWINGS
7. EXTEND WALL TILE 'WT-1' TO 2 COURSES ABOVE T.O. MIRROR.

## GENERAL NOTES

1. PROVIDE BLOCKING FOR SHELVING, GRAB BARS, TOILET ACCESORIES & MILLWORK IN RESTROOMS. REFER TO SHEET A2.0 FOR INFORMATION.
2. REFER TO SHEET A2.0 FINISH, MATERIAL AND RESTROOM ACCESSORIES SCHEDULES.
3. REFER TO SHEET EQ.1 FOR EQUIPMENT & SEATING INFORMATION.
4. G.C. SHALL VERIFY SIZE AND FIT OF EQUIPMENT PRIOR TO INSTALLATION.

THE CONTENTS OF THIS DRAWING WILL REMAIN THE PROPERTY OF THOMAS F. TEDROW, AIA. IT'S CONTENTS INCLUDING ALL INFORMATION, SHALL NOT BE REPRODUCED USING ANY MEANS WITHOUT EXPRESSED WRITTEN CONSENT AND/OR PERMISSION FROM THOMAS F. TEDROW, AIA

STATE OF ALABAMA
THOMAS F. TEDROW
0280
REGISTERED ARCHITECT
ARCHITECT/ENGINEER STAMP

YOUR PIE

THOMAS F. TEDROW, AIA
ARCHITECT
2966 ADAMS BROOK WAY
SNELLVILLE, GA 30078
PH. 678.777.9548
E-MAIL: tom.tedrow@tedrowdesign.com

YOUR PIE
PROMINENCE SHOPS AT LIBERTY PARK
8000 LIBERTY PARKWAY
VESTAVIA HILLS, ALABAMA 35242

| REV. NO. | DATE | DESCRIPTION |
|---|---|---|

PROJECT NO: YPAL-07
DRAWN BY: DLM
CHECKED BY: TT
ISSUE DATE: 08-12-16

INTERIOR ELEVATIONS

A3.1

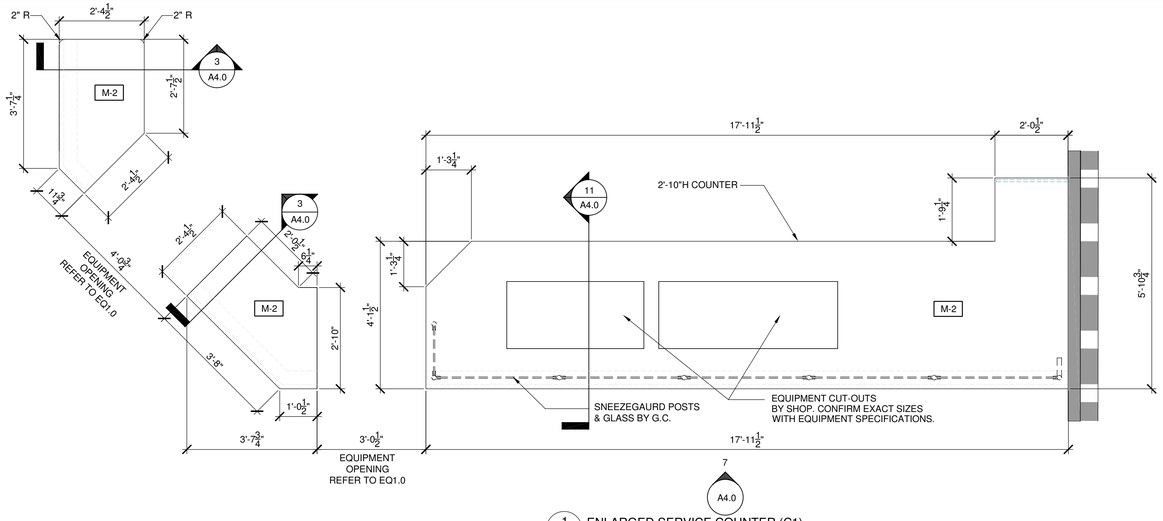


1 A4.0 ENLARGED SERVICE COUNTER (C1)
1/2" = 1'-0"

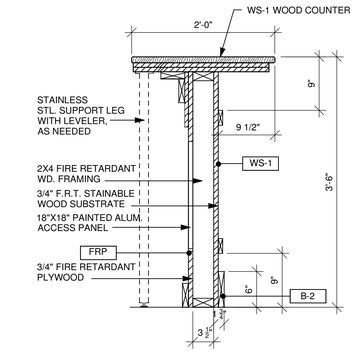


2 A4.0 SECTION AT BAR_HIGH COUNTER
1" = 1'-0"

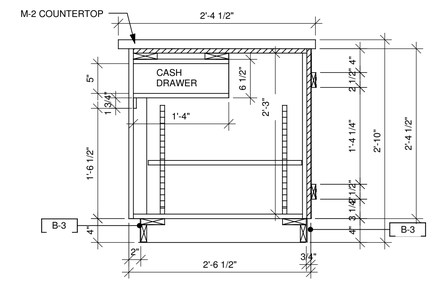


3 A4.0 SECTION POS COUNTER
1" = 1'-0"

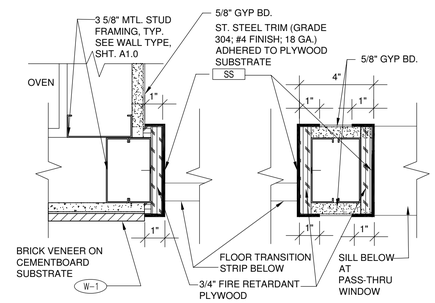


4 A4.0 PLAN DETL. AT WALL OPENING & PASS THRU WINDOW OPENING
3" = 1'-0"

NOT USED

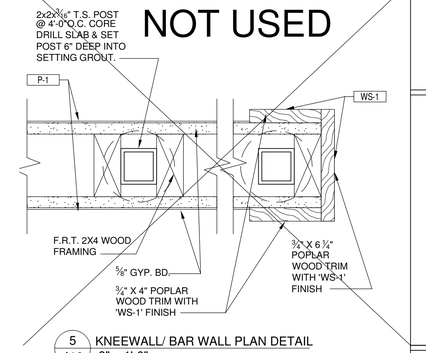


5 A4.0 KNEEWALL/ BAR WALL PLAN DETAIL
3" = 1'-0"

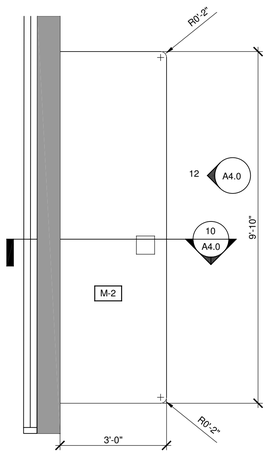


6 A4.0 ENLARGED BEVERAGE STATION (C4)
1/2" = 1'-0"

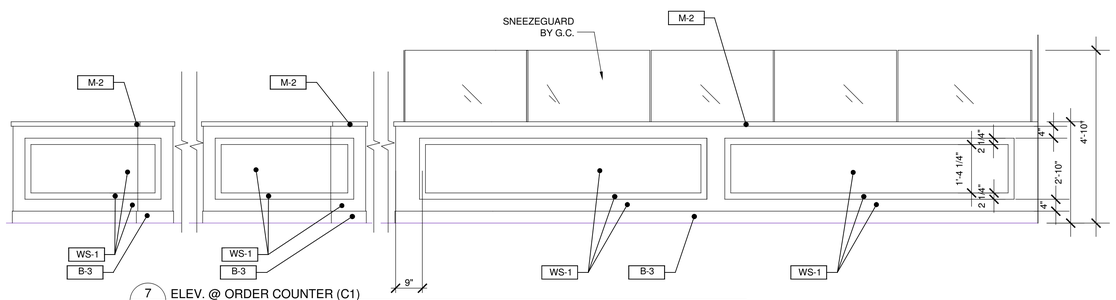


7 A4.0 ELEV. @ ORDER COUNTER (C1)
1/2" = 1'-0"

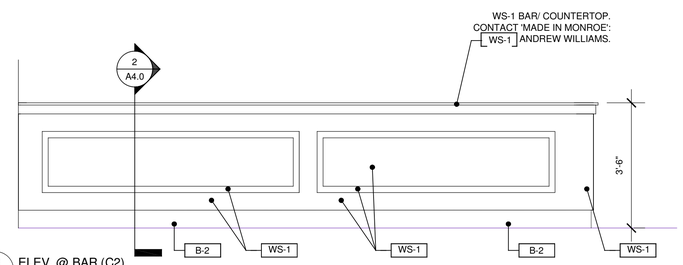


8 A4.0 ELEV. @ BAR (C2)
1/2" = 1'-0"

GENERAL SHEET NOTE:
WS-1 BAR/ COUNTERTOP: CONTACT: RECLAIMED WOOD TOPS BUT 'MADE IN MONROE, LLC.'; ANDREW WILLIAMS.
(678)863-0031
ALWILLIAMS0310@GMAIL.COM

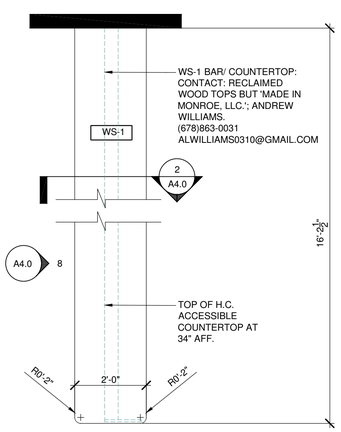


9 A4.0 ENLARGED BAR PLAN (C2)
1/2" = 1'-0"

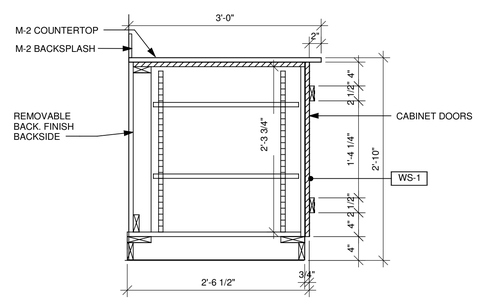


10 A4.0 SECTION @ BEVERAGE COUNTER
1" = 1'-0"

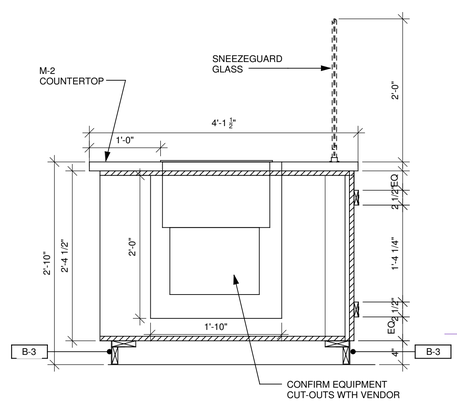


11 A4.0 SECTION @ SERVICE/ ORDER COUNTER
1" = 1'-0"

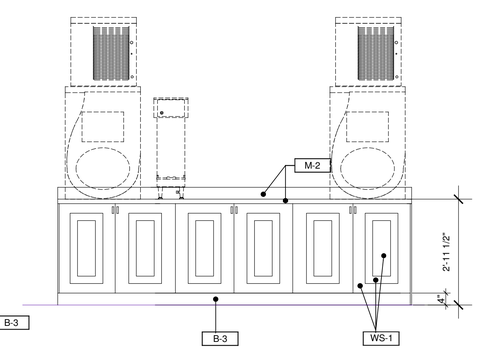


12 A4.0 ELEV. @ BEVERAGE STATION (C4)
1/2" = 1'-0"

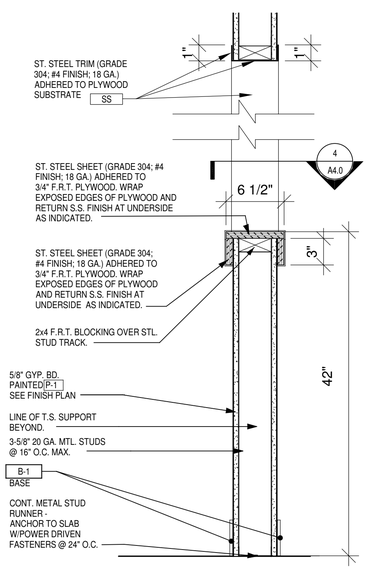


13 A4.0 SECTION DET. AT PASS-THRU WINDOW
1 1/2" = 1'-0"

THE CONTENTS OF THIS DRAWING WILL REMAIN THE PROPERTY OF THOMAS F. TEDROW, AIA. IT'S CONTENTS INCLUDING ALL INFORMATION, SHALL NOT BE REPRODUCED USING ANY MEANS WITHOUT EXPRESSED WRITTEN CONSENT AND/OR PERMISSION FROM THOMAS F. TEDROW, AIA

STATE OF ALABAMA
THOMAS F. TEDROW
8290
REGISTERED ARCHITECT
ARCHITECT/ENGINEER STAMP

YOUR PIE

THOMAS F. TEDROW, AIA
ARCHITECT
2866 ADAMS BROOK WAY
SNELLVILLE, GA 30078
PH. 678.777.9548
E-MAIL: tom.tedrow@edrowdesign.com

YOUR PIE
PROMINENCE SHOPS AT LIBERTY PARK
8000 LIBERTY PARKWAY
VESTAVIA HILLS, ALABAMA 35242

| REV. NO. | DATE | DESCRIPTION |
|---|---|---|

PROJECT NO: YPAL-07
DRAWN BY: DLM
CHECKED BY: TT
ISSUE DATE: 08-12-16

MILLWORK DETAILS

A4.0

## System No. W-L-2038

June 23, 2000

**(Formerly System No. 614)**

**F Rating — 1 and 2 Hr (See Item 1)**

**T Rating — 1 and 2 Hr (See Item 1)**

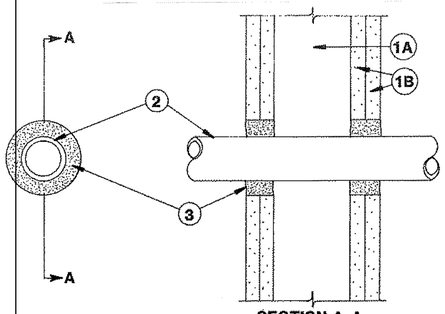


SECTION A-A

1. **Wall Assembly —** The 1 or 2 hr fire-rated gypsum wallboard/stud wall assembly shall be constructed of the materials and in the manner specified in the individual U300 or U400 Series Wall and Partition Designs in the UL Fire Resistance Directory and shall include the following construction features:

A. **Studs —** Wall framing may consist of either wood studs or steel channel studs. Wood studs to consist of nom 2 by 4 in. lumber spaced 16 in. OC. Steel studs to be min 2-1/2 in. wide and spaced max 24 in. OC.

B. **Gypsum Board* —** 5/8 in. thick, 4 ft wide with square or tapered edges. The gypsum wallboard type, thickness, number of layers, fastener type and sheet orientation shall be as specified in the individual U300 or U400 Series design in the UL Fire Resistance Directory. Max diameter of opening is 4-3/8 in.

The hourly F and T ratings of the firestop system are equal to the hourly fire rating of the wall assembly in which it is installed.

2. **Through Penetrants —** One nonmetallic pipe, conduit or tubing to be centered within the firestop system. The max diam of the through penetrant and annular space within the firestop system is dependent upon the type of fill material (Item 3). Pipe, conduit or tubing to be rigidly supported on both sides of the wall assembly. The following types and sizes of nonmetallic pipes, conduits or tubing may be used:

A. **Polyvinyl Chloride (PVC) Pipe —** Nom 2 in. diam (or smaller) Schedule 40 solid core PVC pipe for use in closed (process or supply) piping systems.

B. **Chlorinated Polyvinyl Chloride (CPVC) Pipe —** Nom 2 in. diam (or smaller) SDR17 CPVC pipe for use in closed (process or supply) piping systems.

C. **Rigid Nonmetallic Conduit+ —** Nom 2 in. diam (or smaller) Schedule 40 PVC conduit installed in accordance with Article 347 of the National Electrical Code (NFPA No. 70).

D. **Electrical Nonmetallic Tubing (ENT)+ —** Nom 1 in. diam (or smaller) PVC tubing installed in accordance with Article 331 of the National Electrical Code (NFPA No. 70).

3. **Fill, Void or Cavity Material* —** Sealant — In 2 hr fire rated assemblies, min 1-1/4 in. thickness of fill material applied within the annulus, flush with both surfaces of wall. In 1 hr fire rated assemblies, min 5/8 in. thickness of fill material applied within the annulus, on both surfaces of wall. Additional fill material to be installed such that a min 5/8 in. thick crown is formed around the penetrating item and lapping a min 1 in. beyond the periphery of the opening.

The max diam of the through penetrant and annular space within the firestop system is dependent upon the type of fill material as tabulated below:

| Max Diam of Through Penetrant In. | Nom Annular Space In. | Fill Mtl Type |
|---|---|---|
| 1 | 1/2 | FSP 1100 Putty |
| 2 | 1 | FS 1900 Sealant |

**W R GRACE & CO - CONN** — FSP 1100 Putty or FS 1900 Sealant.

+Bearing the UL Listing Mark

*Bearing the UL Classification Marking

1 & 2 HOUR FIRESTOP FOR METALLIC PIPE THRU RATED ASSEMBLY

## System No. W-L-1089

June 23, 2000

**F Ratings — 1 and 2 Hr (See Item 1)**

**T Rating — 0 Hr**

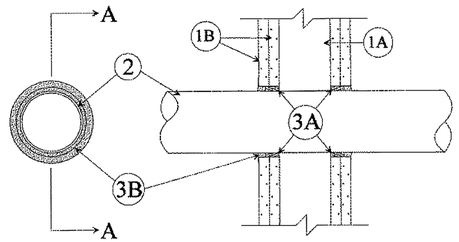


SECTION A-A

1. **Wall Assembly —** The fire-rated gypsum wallboard/stud wall assembly shall be constructed of the materials and in the manner described in the individual U300 or U400 Series Wall or Partition Design in the UL Fire Resistance Directory and shall include the following construction features:

A. **Studs —** Wall framing may consist of either wood studs or steel channel studs. Wood studs to consist of nom 2 by 4 in. lumber spaced 16 in. OC. Steel studs to be min 2-1/2 in. wide and spaced max 24 in. OC. When steel studs are used and the diam of opening exceeds the width of stud cavity, the opening shall be framed on all sides using lengths of steel stud installed between the vertical studs and screw-attached to the steel studs at each end. The framed opening in the wall shall be 4 to 6 in. wider and 4 to 6 in. higher than the diam of the penetrating item such that, when the penetrating item is installed in the opening, a 2 to 3 in. clearance is present between the penetrating item and the framing in all four sides.

B. **Gypsum Board* —** 5/8 in. thick, 4 ft wide with square or tapered edges. The gypsum wallboard type, thickness, number of layers, fastener type and sheet orientation shall be as specified in the individual U300 or U400 Series Design in the UL Fire Resistance Directory. Max diam of opening is 24-5/8 in. for steel stud walls. Max diam of opening is 14-1/2 in. for wood stud walls.

The hourly F Rating of the firestop system is equal to the hourly fire rating of the wall assembly in which it is installed.

2. **Through Penetrant** — One metallic pipe, conduit or tubing to be installed either concentrically or eccentrically within the firestop system. The annular space between pipe, conduit or tubing and the periphery of opening shall be min 1/8 in. to max 1/2 in. Pipe, conduit or tubing to be rigidly supported on both sides of wall assembly. The following types and sizes of metallic pipes, conduits or tubing may be used:

A. **Steel Pipe —** Nom 24 in diam (or smaller) Schedule 10 (or heavier) steel pipe.

B. **Iron Pipe —** Nom 24 in. diam (or smaller) cast or ductile iron pipe.

C. **Conduit —** Nom 4 in. diam (or smaller) steel electrical metallic tubing or 6 in. diam steel conduit.

D. **Copper Tubing —** Nom 6 in. diam (or smaller) Type L (or heavier) copper tubing.

E. **Copper Pipe —** Nom 6 in. diam (or smaller) Regular (or heavier) copper pipe.

3. **Firestop System** — The firestop system shall consist of the following:

A. **Packing Material —** In 2 hr fire-rated assemblies, min 2 in. thickness of min 4 pcf mineral wool batt insulation firmly packed into opening as a permanent form on both sides of wall. Packing material to be recessed from both surfaces of the wall as required to accommodate the required thickness of fill material. In 1 hr fire-rated assemblies, min 3-3/4 in. thickness of min 4 pcf mineral wool batt insulation firmly packed into opening as a permanent form. Packing material to be flush with both surfaces of the wall.

B. **Fill, Void or Cavity Material* — Sealant —** In 2 hr fire-rated assemblies, 1/4 in. thickness of fill material applied within the annulus on both surfaces of wall. Additional fill material to be installed such that a min 1-1/4 in. thick crown is formed around the penetrating item and lapping a min 1/4 in. beyond the periphery of the opening. In 1 hr fire-rated assemblies, a min 1/2 in. thick crown is formed around the penetrating item and lapping a min 1/2 in. beyond the periphery of the opening on both surfaces of wall.

**W R GRACE & CO - CONN** — FS 1900 Sealant

1 & 2 HOUR FIRESTOP FOR 2" OR SMALLER METALLIC PIPE THRU RATED ASSEMBLY

## System No. W-L-2037

June 23, 2000

**Formerly System No. 612**

**F Rating — 1, 1-1/2 and 2 Hr (See Item 2)**

**T Rating — 3/4 and 1-1/2 Hr (See Item 2)**

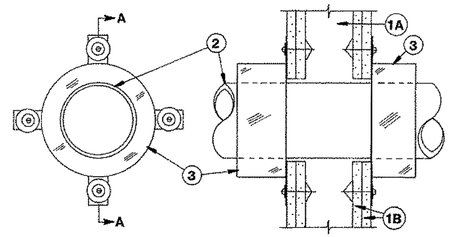


SECTION A-A

1. **Wall Assembly —** The 1 or 2 hr fire-rated gypsum wallboard/stud wall assembly shall be constructed of the materials

and in the manner specified in the individual U300 or U400 Series Wall and partition Designs in the UL Fire Resistance Directory and shall include the following construction features:

A. **Studs —** Wall framing may consist of either wood studs or steel channel studs. Wood studs to consist of nom 2 by 4 in. lumber spaced 16 in. OC. Steel studs to be min 2-1/2 in. wide and spaced max 24 in. OC.

B. **Gypsum Board* —** 5/8 in. thick, 4 ft wide with square or tapered edges. The gypsum wallboard type, thickness, number of layers, fastener type and sheet orientation shall be as specified in the individual U300 or U400 Series Design in the UL Fire Resistance Directory. Max diam of opening is 9-1/8 in.

2. **Through-Penetrants —** One nonmetallic pipe or conduit to be centered within the firestop system. The annular space between pipe or conduit and periphery of opening shall be a min 0 in. (point contact) to max 1/16 in. Pipe or conduit to be rigidly supported on both sides of wall assembly. The following types and sizes of nonmetallic pipes and conduit may be used:

A. **Polyvinyl Chloride (PVC) Pipe —** Nom 8 in. diam (or smaller) Schedule 40 solid core PVC pipe for use in closed (process or supply) or vented (drain, waste or vent) piping systems.

B. **Rigid Nonmetallic Conduit (RNC)+ —** Nom 4 in. diam (or smaller) Schedule 40 PVC conduit installed in accordance with Article 347 of the National Electrical Code (NFPA No. 70).

C. **Chlorinated Polyvinyl Chloride (CPVC) Pipe —** Nom 4 in. diam (or smaller) SDR 17 CPVC pipe for use in closed (process or supply) piping systems.

D. **Acrylonitrile Butadiene Styrene (ABS) Pipe —** Nom 4 in. diam (or smaller) Schedule 40 cellular core ABS pipe for use in closed (process or supply) or vented (drain, waste or vent) piping systems.

E. **Flame Retardant Polypropylene (FRPP) Pipe —** Nom 4 in. diam (or smaller) Schedule 40 FRPP pipe for use in closed (process or supply) or vented (drain, waste or vent) piping systems.

The F and T ratings of the firestop system are dependent upon the hourly rating of the wall assembly and type and size of through-penetrant as tabulated below:

| Type of Through Penetrant | Max Diam of Through Penetrant In. | Rating of Wall Hr | F Rating Hr | T Rating Hr |
|---|---|---|---|---|
| PVC Pipe | 4 | 2 | 2 | 1-1/2 |
| PVC Pipe | 8 | 1 | 1 | 3/4 |
| PVC Pipe | 8 | 2 | 1-1/2 | 1-1/2 |
| RNC | 4 | 2 | 2 | 1-1/2 |
| RNC | 4 | 1 | 1 | 3/4 |
| CPVC Pipe | 4 | 2 | 2 | 1-1/2 |
| CPVC Pipe | 4 | 1 | 1 | 3/4 |
| ABS Pipe | 4 | 2 | 1-1/2 | 1-1/2 |
| FRPP Pipe | 4 | 2 | 1-1/2 | 1-1/2 |

3. **Firestop Device* —** Galv steel collar lined with an intumescent material sized to fit the specific diam of the through-penetrant. Device shall be installed around through-penetrant in accordance with accompanying installation instructions. Device incorporates four anchor tabs for securement to each surface of wall assembly by means of 1/8 in. diam by 3 in. long toggle bolts in conjunction with 1/8 in. diam by 3/4 in. and 1/4 in. diam by 1-1/4 in. steel fender washers.

**W R GRACE & CO - CONN** — FSD Device

learing the UL Listing Mark

earing the UL Classification Marking

1 & 2 HOUR FIRESTOP FOR 2" OR SMALLER NON-METALLIC PIPE THRU RATED ASSEMBLY

## System No. W-L-1007

June 23, 2000

**(Formerly System No. 236)**

**F Rating — 1 and 2 Hr (See Item 1)**

**T Ratings — 0, 1/2 and 1-1/2 Hr (See Item 2)**

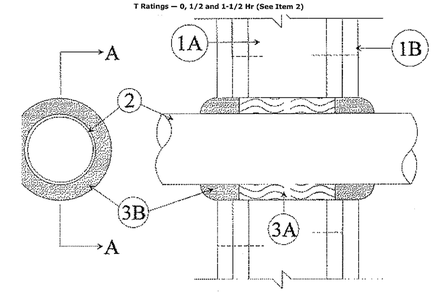


SECTION A-A

1. **Wall Assembly —** The 1 or 2 hr fire-rated gypsum wallboard/stud wall assembly shall be constructed of the materials and in the manner described in the individual U300 or U400 Series Wall and Partition Designs in the UL Fire Resistance Directory and shall include the following construction features:

A. **Studs —** Wall framing may consist of either wood studs or steel channel studs. Wood studs to consist of nom 2 by 4 in. lumber spaced 16 in. OC. In 2 hr fire-rated assemblies, steel studs to be min 2-1/2 in. wide and spaced max 24 in. OC. In 1 hr fire-rated assemblies, steel studs to be min 3-5/8 in. wide and spaced max 24 in. OC.

B. **Gypsum Board* —** 5/8 in. thick, 4 ft wide with square or tapered edges. The gypsum wallboard type, thickness, number of layers, fastener type and sheet orientation shall be as specified in the individual U300 or U400 Series Design in the UL Fire Resistance Directory. Max diam of opening is 5 in.

The hourly F Rating of the firestop system is equal to the hourly fire rating of the wall assembly in which it is installed.

2. **Through Penetrant —** One metallic pipe or conduit to be centered within the firestop system. A nom annular space of 1/4 in. is required within the firestop system. Pipe or conduit to be rigidly supported on both sides of wall assembly. The following types and sizes of metallic pipes or conduits may be used:

A. **Steel Pipe —** Nom 4 in. diam (or smaller) Schedule 10 (or heavier) steel pipe.

B. **Conduit —** Nom 4 in. diam (or smaller) steel electrical metallic tubing or 4 in. diam steel conduit.

The T Rating of the firestop system is dependent upon the max diam of the through-penetrant and hourly rating of the wall assembly as shown in the table below:

| Max Diam of Through Penetrant | Rating of Wall Hr | T Rating Hr |
|---|---|---|
| 1/2 | 2 | 1-1/2 |
| 1/2 | 1 | 1 |
| 2 | 2 | 1/2 |
| 2 | 1 | 1/2 |
| 4 | 2 | 0 |
| 4 | 1 | 0 |

3. **Firestop System** — The firestop system shall consist of the following:

A. **Packing Material* —** In 2 hr fire-rated assemblies, min 3 in. thickness of min 4 pcf mineral wool insulation firmly packed into opening as a permanent form. In 1 hr fire-rated assemblies, min 2-7/8 in. thickness of min 4 pcf mineral wool insulation firmly packed into opening as a permanent form. Packing material to be recessed from both surfaces of wall as required to accommodate the required thickness of fill material.

B. **Fill, Void or Cavity Material* — Sealant —** In 2 hr fire-rated assemblies, min 1 in. thickness of fill material applied within annulus, flush with both surfaces of wall. Additional fill material to be installed such that a min 1/2 in. thick crown is formed around the penetrating item. In 1 hr fire-rated assemblies, min 5/8 in. thickness of fill material applied within annulus, flush with both surfaces of wall. Additional fill material to be installed such that a min 1 in. thick crown is formed around the penetrating item.

**W R GRACE & CO - CONN** — FS900, FS901, FS903, FS903CG, FS905, FS905CG, FS929, FST901, FST903 and FST905 Sealant.

1 & 2 HOUR RATED FIRESTOP FOR METALLIC PIPE THRU RATED ASSEMBLY

THE CONTENTS OF THIS DRAWING WILL REMAIN THE PROPERTY OF THOMAS F. TEDROW, AIA. IT'S CONTENTS INCLUDING ALL INFORMATION, SHALL NOT BE REPRODUCED USING ANY MEANS WITHOUT EXPRESSED WRITTEN CONSENT AND/OR PERMISSION FROM THOMAS F. TEDROW, AIA

STATE OF ALABAMA
THOMAS F. TEDROW
0290
REGISTERED ARCHITECT

ARCHITECT/ENGINEER STAMP

YOUR PIE

THOMAS F. TEDROW, AIA
ARCHITECT
2866 ADAMS BROOK WAY
SNELLVILLE, GA 30078
PH. 678.777.5548
E-MAIL: tom.tedrow@tedrowdesign.com

YOUR PIE
PROMINENCE SHOPS AT LIBERTY PARK
8000 LIBERTY PARKWAY
VESTAVIA HILLS, ALABAMA 35242

| REV. NO. | DATE | DESCRIPTION |
|---|---|---|

PROJECT NO: YPAL-07
DRAWN BY: DLM
CHECKED BY: TT
ISSUE DATE: 08-12-16

FIRESTOP DETAILS - U.L. INFO.

A4.1

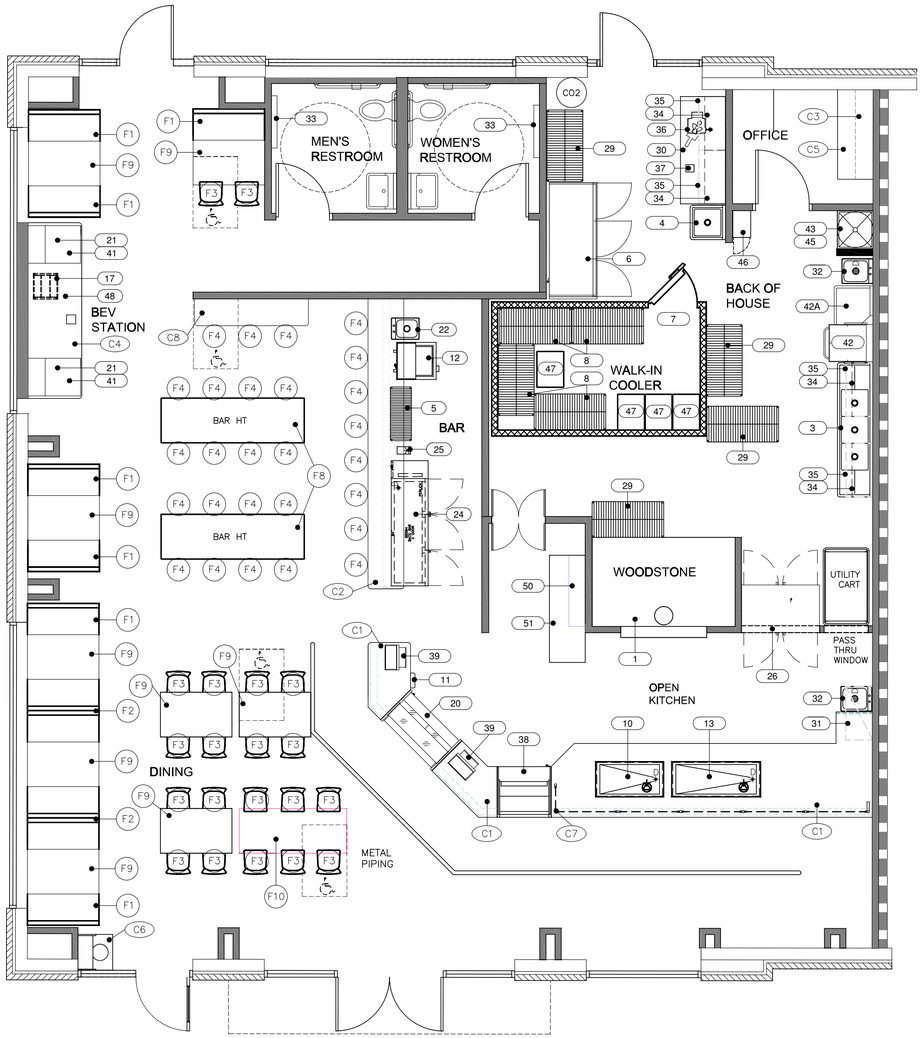


1 EQ1.0 EQUIPMENT PLAN
1/4" = 1'-0"

## EQUIPMENT SCHEDULE

| NO. | Qty | ITEM | MANUFACTURER | MODEL NUMBER | FURN. BY | INST. BY |
|---|---|---|---|---|---|---|
| 1 | 1 | PIZZA OVEN | WOODSTONE | WS-FD-9660 | KES | GC |
| 2 | 0 | UNDERCOUNTER REFRIGERATOR | BEVERAGE AIR | UCR67A | - | - |
| 3 | 1 | 3 COMPARTMENT SINK | ADVANCE TABCO | FE-3-1812-18RL-X | KES | KES |
| 3A | 1 | PRE-RINSE UNIT WITH FAUCET | T&S | B-0133/ADF06-B | KES | KES |
| 3B | 3 | LEVER WASTE | T&S | B-3972 | KES | KES |
| 4 | 1 | 1-COMPARTMENT SINK | ADVANCE TABCO | FE-1-1812-X | KES | KES |
| 4A | 1 | FAUCET W/12" NOZZLE | T&S | B-0231 | KES | KES |
| 4B | 1 | LEVER WASTE | T&S | B-3972 | KES | KES |
| 5 | 1 | UNDERCABINET SHELVING UNIT, 14X36 | SUNFAB | TS14X36C | KES | KES |
| 6 | 1 | REACH-IN FREEZER, 3 DOOR | HOSHIZAKI | HF3-SS | KES | KES |
| 7 | 1 | WALK-IN COOLER | NORLAKE | CUSOTM | KES | GC |
| 8 | 4 | 24X48 SHELVING UNIT | SUNFAB | TS24X48GE | KES | KES |
| 9 | 0 | KEG STORAGE RACK | CHANNEL | KAR68 | - | - |
| 10 | 1 | DROP-IN COLD PAN, 3-PAN | DUKE | ADI-3MD-N7 | KES | KES |
| 11 | 1 | DIPPERWELL | FMP | 117-1339 | KES | KES |
| 12 | 1 | BOTTLE COOLER | TURBO AIR | TBC-24SB | KES | KES |
| 13 | 1 | DROP-IN COLD PAN, 4-PAN | DUKE | ADI-4MD-N7 | KES | KES |
| 17 | 1 | BAG IN A BOX | OTHERS | | OTHERS | OTHERS |
| 19 | 0 | HEATED CABINET, MOBILE, UNDER-CTR | CRESCOR | H-339-X-12-188C | - | - |
| 20 | 1 | GELATO CASE | SEVEL | SLM-6 | KES | KES |
| 21 | 2 | ICE MAKER | HOSHIZAKI | VERIFY MODEL | KES | KES |
| 21A | 2 | WATER FILTER ASSEMBLY | BY OTHERS | BY OTHERS | KES | KES |
| 22 | 1 | BAR SINK | KLINGER | BAR1 | KES | KES |
| 24 | 1 | BACKBAR BEER COOLER, W/TAPS | PERLICK | BBS84 (VERIFY) | KES | KES |
| 25 | 1 | GLASS RINSER | GLASTENDER | UMRI | KES | KES |
| 26 | 1 | PASS-THRU REFRIGERATOR, DOUBLE | TRAULSEN | G21057-032 | KES | KES |
| 29 | 4 | 24X48 SHELVING UNIT, 86"H | SUNFAB | TS24X48GE | KES | KES |
| 30 | 1 | WORK TABLE, 30X72 | KLINGER | ABST 3072 | KES | KES |
| 31 | 1 | WALL SHELF, 18X36 | SUNFAB | TS18X36C | KES | KES |
| 32 | 2 | HAND SINK | SUNFAB | SFHSSS-1715 | KES | KES |
| 33 | 2 | CHANGING TABLE | KOALA KARE | KB200-01 | KES | KES |
| 34 | 4 | 14X36 WALL SHELVING, W/BRACKET | SUNFAB | TS14X36GE | KES | KES |
| 35 | 4 | 18X36 WALL SHELVING, W/BRACKET | SUNFAB | TS18X36GE | KES | KES |
| 36 | 1 | SLICER | GLOBE | C10 | KES | KES |
| 37 | 1 | HAND MIXER | WARING | WSB40 | KES | KES |
| 38 | 1 | GRAB N GO | FEDERAL | ELPRSS3 | KES | KES |
| 39 | 2 | POS | BY OTHERS | BY OTHERS | OTHERS | OTHERS |
| 40 | - | SPARE | | | | |
| 41 | 2 | COKE MACHINE, COUNTERTOP STYLE | BY OTHERS | BY OTHERS | OTHERS | OTHERS |
| 42 | 1 | DISH MACHINE | BY OTHERS | BY OTHERS | OTHERS | OTHERS |
| 42A | 1 | CLEAN DISH TABLE | KLINGER | CDT-24 | KES | KES |
| 43 | 1 | MOP SINK | BY OTHERS | BY OTHERS | OTHERS | OTHERS |
| 44 | - | SPARE | | | | |
| 45 | 1 | HOT WATER HEATER | BY OTHERS | BY OTHERS | OTHERS | OTHERS |
| 46 | 1 | EMPLOYEE LOCKERS | WIN-HOLT | WL-66/15 | KES | KES |
| 47 | 4 | DOUGH DOLLY | WIN-HOLT | D-2027 | KES | KES |
| 48 | 1 | ICED TEA BREWER/DISPENSER | BY OTHERS | BY OTHERS | OTHERS | OTHERS |
| 50 | 1 | PIZZA BOX WALL STORAGE | ACF | CUSTOM | KES | KES |
| 51 | 1 | WORK TABLE, 24X72 | KLINGER | ABST 2472 | KES | KES |

## CASEWORK AND FURNITURE SCHEDULE

| NO. | Qty | ITEM | MANUFACTURER | MODEL NUMBER |
|---|---|---|---|---|
| C1 | 1 | SERVING LINE COUNTER | SCC | CUSTOM |
| C2 | 1 | EATING BAR | SCC, MIM | CUSTOM |
| C3 | 1 | OFFICE WALL CABINET | SCC | CUSTOM |
| C4 | 1 | BEVERAGE AND CONDIMENT COUNTER | MIM | CUSTOM |
| C5 | 1 | LAMINATE OFFICE DESK | SCC | CUSTOM |
| C6 | 1 | TRASH RECEPTACLE | MIM | CUSTOM |
| C7 | 1 | SNEEZE GUARD | VAR-TECH | CUSTOM |
| C8 | 1 | BAR AREA WOOD TOP, AGAINST WALL | MIM | CUSTOM |
| | | | | |
| F1 | 7 | 48"W SINGLE BOOTH | OWS | CUSTOM |
| F2 | 2 | 48"W DOUBLE BOOTH | OWS | CUSTOM |
| F3 | 20 | DINING CHAIR | OWS | CUSTOM |
| F4 | 27 | BARSTOOL | OWS | CUSTOM |
| F8 | 2 | 30X96 TABLE, BAR HT | MIM | CUSTOM |
| F9 | 9 | 30X48 TABLE, DINING HT | MIM | CUSTOM |
| F10 | 1 | 30X72 TABLE, DINING HT | MIM | CUSTOM |
| | | | | |
| F11 | 14 | PATIO CHAIRS | CUSTOM | CUSTOM |
| F12 | 7 | PATIO TABLE, 24X24 | CUSTOM | CUSTOM |
| F13 | 0 | PATIO TABLE, 48" DIAMETER | CUSTOM | CUSTOM |

THE CONTENTS OF THIS DRAWING WILL REMAIN THE PROPERTY OF THOMAS F. TEDROW, AIA. IT'S CONTENTS INCLUDING ALL INFORMATION, SHALL NOT BE REPRODUCED USING ANY MEANS WITHOUT EXPRESSED WRITTEN CONSENT AND/OR PERMISSION FROM THOMAS F. TEDROW, AIA

STATE OF ALABAMA
THOMAS F. TEDROW
0290
REGISTERED ARCHITECT

ARCHITECT/ENGINEER STAMP

YOUR PIE

THOMAS F. TEDROW, AIA
ARCHITECT
2866 ADAMS BROOK WAY
SNELLVILLE, GA 30078
PH. 678.777.5548
E-MAIL: tom.tedrow@tedrowdesign.com

YOUR PIE
PROMINENCE SHOPS AT LIBERTY PARK
8000 LIBERTY PARKWAY
VESTAVIA HILLS, ALABAMA 35242

| REV. NO. | DATE | DESCRIPTION |
|---|---|---|
| | | |

PROJECT NO: YPAL-07
DRAWN BY: DLM
CHECKED BY: TT
ISSUE DATE: 08-12-16

EQUIPMENT PLAN & SCHEDULE

EQ1.0

# I. GENERAL PROVISIONS

A. OVERVIEW
1. ALL WORK DONE UNDER THIS CONTRACT SHALL COMPLY WITH ALL STATE AND LOCAL CODES HAVING JURISDICTION AND WITH THE REQUIREMENTS OF THE UTILITY COMPANIES WHOSE SERVICES MAY BE USED. ALL MODIFICATIONS REQUIRED BY THESE CODES SHALL BE MADE BY THE CONTRACTOR WITHOUT ADDITIONAL CHARGES. WHERE CODE REQUIREMENTS ARE LESS THAN THOSE SHOWN ON THE PLANS OR IN THE SPECIFICATIONS, THE PLANS AND SPECIFICATIONS SHALL BE FOLLOWED. WHERE APPLICABLE, NFPA REQUIREMENTS SHALL BE MET.
2. IN CASE OF ANY CONFLICTS BETWEEN CONTRACT DOCUMENTS, THE STRICTER/MORE STRINGENT SHALL GOVERN.
3. THE CONTRACTOR SHALL OBTAIN ALL PERMITS, INSPECTIONS, AND APPROVALS AS REQUIRED BY ALL AUTHORITIES HAVING JURISDICTION AND DELIVER CERTIFICATES OF APPROVAL TO THE ENGINEER. ALL FEES AND COSTS OF ANY NATURE WHATSOEVER INCIDENTAL TO THESE PERMITS, INSPECTIONS AND APPROVALS MUST BE ASSUMED AND PAID BY THE CONTRACTOR.
4. THE CONTRACTOR SHALL COMPLY WITH ALL APPLICABLE PROVISIONS OF O.S.H.A.
5. THE WORKMANSHIP AND MATERIALS COVERED BY THESE SPECIFICATIONS SHALL CONFORM TO ALL ORDINANCES AND REGULATIONS OF THE CITY, COUNTY AND/OR OTHER AUTHORITIES HAVING JURISDICTION.
6. CONTRACTOR SHALL VISIT THE SITE AND EXAMINE EXISTING CONDITIONS BEFORE SUBMITTING BID. NO ALLOWANCE WILL BE MADE FOR LACK OF KNOWLEDGE OF EXISTING CONDITIONS WHEN SUCH CONDITIONS CAN BE DETERMINED BY OBSERVATION.
7. PRIOR TO SUBMITTING DATA FOR OR PURCHASING EQUIPMENT REQUIRING ELECTRICAL SERVICE, THE CONTRACTOR SHALL VERIFY THAT ELECTRICAL CHARACTERISTICS OF EQUIPMENT SHALL COMPLY WITH ELECTRICAL SERVICE PROVIDED FOR THE SPECIFIED ITEMS OF EQUIPMENT.
8. UPON RECEIPT OF THE CONTRACTOR OF REVIEWED SUBMITTALS FOR EQUIPMENT PROVIDED UNDER THIS DIVISION, THE CONTRACTOR SHALL COORDINATE THE ELECTRICAL SERVICE REQUIREMENTS, I.E., MOTOR HORSEPOWER AND FULL LOAD AMPS, ELECTRICAL SERVICE CHARACTERISTICS (VOLTAGE AND PHASE), AND NUMBER OF SERVICES FOR EACH ITEM OF EQUIPMENT REQUIRING ELECTRICAL CONNECTIONS WITH THE ELECTRICAL DRAWINGS AND SPECIFICATIONS.
9. ITEMS ON OR PROJECTING THROUGH THE CEILING SHALL BE COORDINATED WITH OTHER TRADES.

B. OPERATION AND MAINTENANCE INSTRUCTIONS
1. THE CONTRACTOR SHALL PROVIDE TWO OPERATION AND MAINTENANCE MANUALS. THE MANUALS SHALL BE COMPILED IN HARD BACK, THREE RING NOTEBOOKS. EACH MANUALS SHALL HAVE THE PERMANENT LABELS ON FRONT AND SIDE. THE FOLLOWING INFORMATION SHALL APPEAR IN EACH MANUAL:
2. PROVIDE MANUFACTURER'S PRINTED OPERATING PROCEDURES TO INCLUDE START-UP, BREAK-IN, ROUTINE AND NORMAL OPERATING INSTRUCTIONS; REGULATION, CONTROL, STOPPING, SHUTDOWN AND EMERGENCY INSTRUCTIONS; AND SUMMER AND WINTER OPERATING INSTRUCTIONS. PROVIDE MAINTENANCE PROCEDURES FOR ROUTINE PREVENTATIVE MAINTENANCE AND TROUBLESHOOTING; DISASSEMBLY, REPAIR AND REASSEMBLY; ALIGNING AND ADJUSTING INSTRUCTIONS. SERVICING INSTRUCTIONS AND LUBRICATION CHARTS AND SCHEDULES.

C. INSTRUCTIONS OF OWNER PERSONNEL
1. BEFORE FINAL INSPECTION, AT A TIME DESIGNATED BY THE DESIGNER, PROVIDE A COMPETENT REPRESENTATIVE TO INSTRUCT OWNER'S DESIGNATED PERSONNEL IN OPERATION, ADJUSTMENT AND MAINTENANCE OF PRODUCTS, EQUIPMENT AND SYSTEMS UNDER THIS DIVISION OF THE SPECIFICATIONS. FOR EQUIPMENT REQUIRING SEASONAL OPERATIONS, PERFORM INSTRUCTIONS FOR OTHER SEASONS WITHIN SIX MONTHS UNLESS REQUESTED OTHERWISE.

D. COORDINATION
1. THE PRODUCTS OF PARTICULAR MANUFACTURERS HAVE BEEN USED AS THE BASIS OF DESIGN IN PREPARATION OF THESE DOCUMENTS. ANY MODIFICATIONS TO THE MECHANICAL SYSTEMS AND THEIR COMPONENTS, THE ELECTRICAL SYSTEMS, THE BUILDING STRUCTURE AND ARCHITECTURE, OR ANY OTHER PORTION OF THE BUILDING THAT RESULT FROM THE USE OF ANY OTHER THAN THAT BASIS OF DESIGN SHALL BE COORDINATED WITH ALL OTHER TRADES. SUCH COORDINATION SHALL OCCUR BEFORE PURCHASE OR DELIVERY OF PRODUCTS FROM THE MANUFACTURER DRAWINGS OR INSTALLED ACCORDINGLY. ANY RELATED MODIFICATIONS SHALL BE PERFORMED WITHOUT ANY ADDITIONAL COST TO THE CONTRACT.
2. RESIDENTIAL GRADE HVAC COMPONENTS SHALL NOT BE PERMITTED WITHOUT SPECIFIC OWNER INSTRUCTION AND ENGINEER APPROVAL.

E. EXECUTION
1. THE PLANS DO NOT GIVE EXACT ELEVATIONS OR LOCATIONS OF LINES, NOR DO THEY SHOW ALL THE OFFSETS, CONTROL LINES, OR OTHER INSTALLATION DETAILS. THE CONTRACTOR SHALL CAREFULLY LAY OUT HIS WORK AT THE SITE TO CONFORM TO THE STRUCTURAL CONDITIONS, TO PROVIDE PROPER GRADING OF LINES, TO AVOID ALL OBSTRUCTIONS, TO CONFORM TO DETAILS OF INSTALLATION SUPPLIED BY THE MANUFACTURERS OF THE EQUIPMENT TO BE INSTALLED, AND TO THEREBY PROVIDE AN INTEGRATED, COORDINATED AND SATISFACTORY OPERATING INSTALLATION. DO NOT SCALE DRAWINGS.
2. IF THE CONTRACTOR PROPOSES TO INSTALL EQUIPMENT, INCLUDING PIPING AND DUCTWORK, REQUIRING SPACE CONDITIONS OTHER THAN THOSE SHOWN, OR TO REARRANGE THE EQUIPMENT, HE SHALL ASSUME FULL RESPONSIBILITY FOR THE REARRANGEMENT OF THE SPACE AND CONNECT ARRANGEMENT AT NO ADDITIONAL COST TO THE OWNER, AND SHALL HAVE THE ENGINEER REVIEW THE CHANGE BEFORE PROCEEDING WITH THE WORK. THE REQUEST FOR SUCH CHANGES SHALL BE ACCOMPLISHED BY SHOP DRAWINGS OF THE SPACE IN QUESTION.
3. TEMPORARY FILTERS SHALL BE PROVIDED FOR FANS THAT ARE USED DURING CONSTRUCTION. AT THE TIME OF STARTING THE BALANCING OF THE AIR DISTRIBUTION SYSTEM, NEW FILTERS SHALL BE INSTALLED.
4. THE CONTRACTOR IS RESPONSIBLE FOR THE PROPER LOCATION AND SIZE OF ALL SLOT, HOLES OR OPENINGS IN THE BUILDING STRUCTURE PERTAINING TO HIS WORK, AND FOR THE CORRECT LOCATION OF SLEEVES, INSERTS, CORES, ETC.
5. THE CONTRACTOR SHALL SO COORDINATE THE WORK OF THE SEVERAL VARIOUS TRADES THAT IT MAY BE INSTALLED IN THE MOST DIRECT AND WORKMANLIKE MANNER WITHOUT HINDERING OR HANDICAPPING THE OTHER TRADES. PIPING INTERFERENCES SHALL BE HANDLED BY GIVING PRECEDENCE TO PIPE LINES WHICH REQUIRE A STATED GRADE FOR PROPER OPERATION. FOR EXAMPLE SEWER LINES AND CONDENSATE PIPING SHALL TAKE PRECEDENCE OVER WATER LINES IN DETERMINATION OF ELEVATIONS. WHERE THERE IS INTERFERENCE BETWEEN SEWER LINES AND CONDENSATE LINES, THE SEWER LINES SHALL HAVE PRECEDENCE AND PROVISIONS SHALL BE MADE IN THE CONDENSATE LINES FOR LOOPING THEM AROUND THE SEWER LINES. IN ALL CASES, LINES REQUIRING A STATED GRADE FOR THEIR PROPER OPERATION SHALL HAVE PRECEDENCE OVER ELECTRICAL CONDUIT AND DUCTWORK.
6. ALL PIPING AND DUCTWORK IN FINISHED AREAS- EXCEPT WHERE NOTED TO THE CONTRARY- SHALL BE INSTALLED IN A CHASE, FURRED SPACE, OR ABOVE CEILINGS, ETC. IN ALL CASES, PIPES AND DUCTS SHALL BE INSTALLED AS HIGH AS POSSIBLE. RUNS OF PIPING SHALL BE GROUPED WHENEVER IT IS FEASIBLE TO DO SO.
7. PIPING SHALL BE INSTALLED TO PASS INSPECTIONS BY LOCAL PLUMBING INSPECTION DEPARTMENT, STATE AND FEDERAL AUTHORITIES AND INSURANCE COMPANY HAVING JURISDICTION. ANY CHANGES OR ADDITIONS WHICH MAY BE NECESSARY TO OBTAIN SUCH INSPECTIONS AND APPROVAL SHALL BE MADE BY THE CONTRACTOR AS PART OF THIS CONTRACT AND WITHOUT ADDITIONAL COST TO THE OWNER.
8. PIPING, DUCTWORK OR EQUIPMENT SHALL NOT BE INSTALLED IN ELECTRICAL EQUIPMENT ROOMS OR ELEVATOR MACHINE ROOMS EXCEPT AS SERVING ONLY THOSE ROOMS. OUTSIDE OF ELECTRICAL EQUIPMENT ROOMS, DO NOT RUN PIPING OR DUCTWORK OR LOCATE EQUIPMENT, WITH RESPECT TO SWITCHBOARDS, PANEL BOARDS, POWER PANELS, MOTOR CONTROL CENTERS, DRY TYPE TRANSFORMERS OR ROOF TOP AIR CONDITIONING UNIT ELECTRICAL PANELS.
9. PROVIDE ACCESS TO EQUIPMENT AND APPARATUS REQUIRING OPERATION, SERVICE OR MAINTENANCE WITHIN THE LIFE OF THE SYSTEM. INCLUDING, BUT NOT LIMITED TO, MOTORS, VALVES, FILTERS, DAMPERS, SHOCK ABSORBERS, ETC. EQUIPMENT LOCATED ABOVE LAY-IN TYPE CEILINGS IS CONSIDERED ACCESSIBLE.
10. DAMAGED EQUIPMENT SHALL BE REPAIRED OR REPLACED AT THE OPTION OF THE ARCHITECT.

F. ELECTRICAL WORK
1. ALL ELECTRICAL EQUIPMENT PROVIDED UNDER THIS DIVISION SHALL COMPLY WITH THE ELECTRICAL SYSTEM CHARACTERISTICS INDICATED ON THE ELECTRICAL DRAWINGS AND SPECIFIED IN DIVISION 16.
2. EQUIPMENT UNIT MOTOR SPEED CONTROLS, STARTERS, SYSTEM CONTROLS, PILOT LIGHTS, PUSH-BUTTONS, ETC., SHALL BE FURNISHED COMPLETE AS A PART OF THE MOTOR APPARATUS WHICH IT OPERATES. ALL COMPONENTS SHALL BE IN CONFORMANCE WITH THE REQUIREMENTS OF THE NATIONAL ELECTRICAL CODE AND DIVISION 16. ALL MOTOR STARTERS SHALL BE PROVIDED WITH AN H-O-A SWITCH AND CONTROL TRANSFORMER. ALL STARTERS AND DISCONNECT SWITCHES SHALL BE FURNISHED UNDER DIVISION 15. COORDINATE INSTALLATION WITH ELECTRICAL CONTRACTOR PRIOR TO HIS WIRING OF EQUIPMENT.
3. CONTROL WIRING (120V AND LESS) SHALL BE PROVIDED UNDER DIVISION 15 AND EXTENDED FROM THE STARTERS, CONTROL TRANSFORMERS OR 120V POWER CIRCUITS INDICATED ON THE ELECTRICAL DRAWINGS. ALL WIRING FOR 120 VOLTS SHALL BE DONE BY A LICENSED ELECTRICIAN.
4. ALL ELECTRICAL CHARACTERISTICS SHALL BE TAKEN FROM THE ELECTRICAL DRAWINGS AND SPECIFICATIONS AND COORDINATED BEFORE EQUIPMENT IS ORDERED OR PURCHASED.

G. CUTTING AND PATCHING
1. THE CONTRACTOR SHALL ASSUME ALL COST OF, AND BE RESPONSIBLE FOR, ARRANGING FOR ALL CUTTING AND PATCHING REQUIRED TO COMPLETE THE INSTALLATION OF HIS PORTION OF THE WORK. ALL CUTTING SHALL BE CAREFULLY AND NEATLY DONE SO AS NOT TO DAMAGE OR CUT AWAY MORE THAN IS NECESSARY OF ANY EXISTING PORTIONS OF THE STRUCTURE.
2. ALL SURFACES SHALL BE PATCHED TO THE CONDITION OF THE ADJACENT SURFACES.
3. THE CONTRACTOR SHALL MAKE SUITABLE PROVISIONS FOR ADEQUATELY WATERPROOFING AT HIS FLOOR PENETRATIONS OF WATER PROOF MEMBRANE FLOORS. THIS SHALL INCLUDE BUT NOT BE LIMITED TO FLOOR DRAINS, OPEN SIGHT DRAINS, HUB DRAINS, CLEANOUTS, AND SLEEVES FOR THE VARIOUS PIPING. THIS ALSO APPLIES TO MEMBRANE ROOFING SYSTEMS.
4. ALL PENETRATIONS AND WATER PROOFING OF PENETRATIONS IN MEMBRANE ROOFING SYSTEMS SHALL BE COORDINATED WITH AND PERFORMED BY THE MANUFACTURER/INSTALLER.
5. THE CONTRACTOR SHALL INSTALL, AS REQUIRED, IN CONCRETE, CARPENTRY OR MASONRY CONSTRUCTION, ALL NECESSARY HANGERS, SLEEVES, EXPANSION BOLTS, INSERTS AND OTHER FIXTURES AND APPURTENANCES NECESSARY FOR THE SUPPORT OF PIPE, DUCT, EQUIPMENT AND DEVICES FURNISHED UNDER EACH SECTION OF THE SPECIFICATION.
6. FOR WALLS BETWEEN INTERIOR AND BELOW GRADE AREA, THE LINK-SEAL SYSTEM AS MANUFACTURED BY THUNDERLINE CORPORATION SHALL BE USED TO SEAL PIPE TO WALL PENETRATIONS. INSTALL SYSTEM IN ACCORDANCE WITH MANUFACTURER'S INSTRUCTIONS.
7. ESCUTCHEONS SHALL BE INSTALLED ON ALL PIPES WHERE THEY PASS THROUGH FLOORS, CEILINGS, WALLS OR PARTITIONS IN FINISHED AREAS WHERE EXPOSED TO VIEW.
8. WHERE AND HVAC OR PLUMBING REPLACEMENT SCOPE IS INDICATED, MECHANICAL CONTRACTOR SHALL PROVIDE FOR THE DEMOLITION OF EXISTING SYSTEMS THAT ARE BEING REPLACED OR ABANDONED

H. ACCESS DOORS
1. FURNISH AND INSTALL ACCESS DOORS AT EACH POINT REQUIRED TO PROVIDE ACCESS TO CONCEALED VALVES, CLEANOUTS AND OTHER DEVICES REQUIRING OPERATION, ADJUSTMENT OR MAINTENANCE. ACCESS DOORS SHALL BE 16 GAUGE STEEL, PRIME COAT FINISH, WITH MOUNTING STRAPS, CONCEALED HINGES AND SCREWDRIVER LOCKS, DESIGNED FOR THE DOORS TO OPEN 180 DEGREES.
2. ACCESS DOORS INSTALLED IN FIRE WALLS OR PARTITIONS SHALL BE UL LABELED TO MAINTAIN THE FIRE RATING OF THE WALL OR PARTITION.

I. FLAME SPREAD AND SMOKE DEVELOPED PROPERTIES OF MATERIALS
1. MATERIALS AND ADHESIVES USED THROUGHOUT THE MECHANICAL AND ELECTRICAL SYSTEMS FOR INSULATION, AND JACKETS OR COVERINGS OF ANY KIND, OR FOR PIPING OR CONDUIT SYSTEM COMPONENTS, SHALL HAVE A FLAME SPREAD RATING NOT OVER 25 WITHOUT EVIDENCE OF CONTINUED COMBUSTION AND WITH A SMOKE DEVELOPED RATING NOT HIGHER THAN 50. IF SUCH MATERIALS ARE TO BE APPLIED WITH ADHESIVES, THEY SHALL BE TESTED AS APPLIED WITH SUCH ADHESIVES, OR THE ADHESIVES USED SHALL HAVE A FLAME SPREAD RATING NOT OVER 25 AND A SMOKE DEVELOPED RATING NOT HIGHER THAN 50.

# II. INSULATION

A. GENERAL PIPE INSULATION
1. FIBERGLASS SHALL BE ACCEPTABLE FOR INDOOR HOT & COLD DOMESTIC; HYDRONIC PIPING; AND INSULATED DRAINAGE PIPING. PROVIDE PREFABRICATED FITTINGS FOR ELBOWS AND TEE'S. PROVIDE PREFAB PVC FITTINGS OR WHITE ALL SERVICE (INTEGRAL TO PREFAB PIPING ELBOW) PIPING ELBOW JACKETING. PROVIDE PIPE LABELING FOR ALL INSULATED, JACKETED INDOOR PIPING. PVC JACKETING SHALL NOT BE PERMITTED IN RETURN PLENUM AREAS. ALL JACKEING SEAMS SHALL BE SEALED AIR-TIGHT FOR CONTINUOUS VAPOR BARRIER.
2. FITTINGS AND VALVES SHALL BE INSULATED WITH PRE-FORMED FITTINGS, FABRICATED SECTIONS OF PIPE

INSULATION, TANK INSULATION, BLANKET INSULATION, OR INSULATING CEMENT. THICKNESS SHALL BE EQUAL TO ADJACENT PIPE INSULATION. FINISH SHALL BE WITH PRE-FORMED PVC FITTING COVERS OR AS OTHERWISE SPECIFIED ON CONTRACT DRAWINGS.
3. FLANGES, COUPLINGS AND VALVE BONNETS SHALL BE COVERED WITH AN OVERSIZED PIPE INSULATION SECTION SIZED TO PROVIDE THE SAME INSULATION THICKNESS AS ON THE MAIN PIPE SECTION. AN OVERSIZED INSULATION SECTION SHALL BE USED TO FORM A COLLAR BETWEEN THE TWO INSULATION SECTIONS WITH LOW-DENSITY BLANKET INSULATION BEING USED TO FILL GAPS. JACKETING SHALL MATCH THAT USED ON STRAIGHT PIPE SECTIONS. ROUGH CUT ENDS SHALL BE COATED WITH SUITABLE WEATHER OR VAPOR RESISTANT MASTIC AS DICTATED BY THE SYSTEM LOCATION AND SERVICE. ON HOT SYSTEMS WHERE FITTINGS ARE TO BE LEFT EXPOSED, INSULATION ENDS SHOULD BE BEVELED AWAY FROM BOLTS FOR EASY ACCESS.

B. INSULATION THICKNESS
1. DOMESTIC COLD WATER INSULATION SHALL BE 1" MINIMUM OR AS REQUIRED BY LOCAL ENERGY CODES.
2. FOR MEDIA BELOW 60 DEGREES INSULATION SHALL BE 1" UP TO 1-¼" PIPE SIZE; 1.5" THICK UP TO 3" PIPE SIZE; AND 2" THICK BEYOND 3" PIPE SIZE.
3. CHILLED WATER PIPING INSULATION SHALL BE 1" UP TO 1-1/4" PIPE SIZE, 1.5" UP TO 3".

C. FIBERGLASS PIPE INSULATION
1. ONE PIECE PREMOLDED GLASS PIPE INSULATION WITH FACTORY APPLIED ALUMINUM FOIL AND WHITE KRAFT PAPER FLAME RETARDANT VAPOR BARRIER JACKET.
2. PROVIDE SELF _SEALING LONGITUDINAL JACKET LAPS AND BUTT STRIPS. AVERAGE THERMAL CONDUCTIVITY: 0.23 BTU/IN. PER SQUARE FOOT PER DEGREES F PER HOUR AT 75 DEGREES F MEAN TEMPERATURE.
3. PROVIDE INSULATION CEMENT, FIBERGLASS REINFORCEMENT FABRIC, VAPOR BARRIER COATING, AND FITTINGS COVERS, AIR TIGHT INSULATION WITH VAPOR BARRIER.

D. FOAMGLASS PIPE INSULATION
1. FOAM GLASS TYPE PIPE INSULATION SHALL HAVE MAXIMUM K_FACTOR OF 0.38 AT 50 DEGREES F MEAN TEMPERATURE. MINIMUM DENSITY SHALL BE 8 LB/CU. FT., 1 1/2" THICK MINIMUM. PROVIDE MASTIC, FIBERGLASS REINFORCED STRAPPING TAPE TO ASSURE AIR-TIGHT MOISTURE-PROOF INSULATION. PROVIDE WITH ALUMINUM JACKETING THAT SHALL BE 0.016" THICK WITH FITTING COVERS 0.024" THICK. PROVIDE WITH 5 WATT/FT HEAT TRACING BELOW INSULATION FOR OUTDOOR, ABOVE-GROUND INSTALLATION.
2. PROVIDE FOAM GLASS INSERTS AT PIPE HANGERS, CLAMPS, OR OTHER SUPPORTS IN FIBERGLASS OR ELASTOMERIC PIPE INSULATION INSTALLATIONS INSERTS SHALL BE SAME THICKNESS AS ADJOINING PIPE INSULATION. VAPOR SEAL SHALL BE AS MENTIONED ABOVE. ALUMINUM JACKETING SHALL NOT BE REQUIRED FOR INDOOR INSERTS (PVC OR WHITE ALL-SERVICE FOIL/KRAFTJACKETING MEDIA SHALL BE USED).

E. ELASTOMERIC (CLOSED CELL FOAM) PIPE INSULATION
1. ELASTOMERIC SHALL BE PROVIDED FOR ALL REFRIGERANT PIPING AND OUTDOOR INSULATED PIPING AND MAY BE USED FOR BUILDING INTERIOR AND INDOOR DOMESTIC OR HYDRONIC PIPING WILL REQUIRE JACKETING. ALUMINUM FOR OUTDOOR PIPING OR FOIL/WHITE KRAFT MEDIA OR PVC FOR INDOOR PIPING. PROVIDE WITH FULL ADHESIVE ADHERING SEAMS AND JOINTS FOR CONTINUOUS VAPOR BARRIER. ELBOWS SHALL BE FORMED WITH CUT OUT MITERING SEGMENTS AT 30 DEGREES MAXIMUM (12 SEGMENTS AT EACH 90 DEGREE BEND) WITH MASTIC AT ALL SEAMS. PROVIDE PREFORMED JACKETING ELBOWS AT ALL PIPING ELBOWS.

F. FIBERGLASS BLANKET INSULATION FOR DUCTWORK (INDOOR DUCT ONLY)
1. INSULATION SHALL BE BLANKET TYPE FIBERGLASS INSULATION WITH AVERAGE THERMAL CONDUCTIVITY NOT EXCEEDING 0.29 BTU_IN. PER SQUARE FEET PER DEGREES F PER HOUR AT MEAN TEMPERATURE OF 75 DEGREES F. WITH A MINIMUM DENSITY OF 2 LBS/CU.FT., 2" THICK MINIMUM AND FOIL INSULATION FACE. PROVIDE FIRE RETARDANT ADHESIVE OR FOIL REINFORCED KRAFT TAPE, 3" WIDE AT ALL SEAMS. SECURE INSULATION TO DUCT WITH 18 GAUGE TIE-WIRE OR 1/2" X 0.015" GALVANIZED STEEL STRAPS. PROVIDE COMPLETE AIR-TIGHT VAPOR BARRIER FOR ALL DUCTWORK. STAPLES SHALL NOT BE PERMITTED FOR ANY INSULATION ATTACHMENT. PROVIDE GRAY SEALER FOR SEALING JOINTS, PENETRATIONS AND PUNCTURES.
2. CONTINUE INSULATION THROUGH WALL AND CEILING OPENINGS AND SLEEVES, EXCEPT TERMINATE DUCT INSULATION AT FIRE DAMPERS AND AT FLEXIBLE DUCT CONNECTIONS AT AIR HANDLING UNITS. PROTECT INSULATION FROM PHYSICAL DAMAGE AT POINTS OF SUPPORT WHERE INSULATION MAY CARRY LOAD IMPOSED BY SUPPORT. COORDINATE THIS REQUIREMENT WITH TYPES OF HANGER AND SUPPORT USED. HANGERS THAT PENETRATE INSULATION SHALL BE SEALED WITH MASTIC TO PRESERVE CONTINUOUS VAPOR BARRIER.

G. ELASTOMERIC (CLOSED CELL FOAM) DUCT LINER
1. INSTALL INSIDE OF DUCT WITH FULL ADHESIVE COVERAGE ATTACHMENT TO THE SURFACE TO WHICH IT IS APPLIED. 1" FOR INDOOR AND 1-1/2" FOR OUTDOOR. R VALUES SHALL BE R-4.2 FOR 1" AND R-6.2 FOR 1-1/2". FIBERGLASS DUCT LINER SHALL NOT BE PERMITTED UNDER ANY CIRCUMSTANCES. PROVIDE WITH ANTIMICROBIAL PROTECTION. PROVIDE MASTIC AT ALL INTERIOR SEEMS FOR CONTINUOUS VAPOR BARRIER. PROVIDE DUCT LINER AT FIRST FIVE FEET OF SUPPLY AND RAT FOR REFRIGERATION/COOLING AIR HANDLING EQUIPMENT, UPSIZING INDICATED DUCT SIZE TO ACCOUNT FOR INSULATION THICKNESS. FIBERGLASS DUCT LINER OR DUCT BOARD SHALL NOT BE PERMITTED.

# III. VIBRATION ISOLATION

A. ALL MOTORIZED AIR MOVING AND FLUID MOVING EQUIPMENT PIECE SHALL BE PROVIDED WITH VIBRATION ISOLATION MOUNTING OR SUPPORTS.
B. PAD-TYPE ISOLATORS SHALL BE NEOPRENE IN-SHEAR ISOLATION PADS WITH CROSSED DOUBLE RIBS. A STEEL SHIM PLATE SHALL BE PROVIDED BETWEEN THE TWO LAYERS. PADS SHALL BE MOLDED USING OIL RESISTANT 25,000 PSI TENSILE STRENGTH NEOPRENE.
C. HANGING ISOLATORS FOR ITEMS 300 LBS OR LESS SHALL BE BRIDGE-BEARING NEOPRENE MOUNTINGS AND SHALL HAVE A MINIMUM STATIC DEFLECTION OF 0.2" AND BIDIRECTIONAL SEISMIC CAPABILITY. THE ELEMENTS SHALL PREVENT THE CENTRAL THREADED SLEEVE AND ATTACHMENT BOLT FROM CONTACTING THE CASTING DURING NORMAL OPERATION. THE SHOCK ABSORBING NEOPRENE MATERIALS SHALL BE COMPOUNDED TO BRIDGE-BEARING SPECIFICATIONS. MASONICS MODEL WSW.
D. HANGING ISOLATORS FOR EQUIPMENT ABOVE 300 LBS SHALL BE STEEL SPRING-TYPE INCORPORATING STEEL HOUSING, NEOPRENE OR LDS RUBBER SPRING CUP SIZED FOR 1" DEFLECTION. INSTALL SPRING IN PLUMB CONFIGURATION WITH MAXIMUM 1" DEFLECTION FROM ANY HORIZONTAL DISTORTION. THE ELEMENTS SHALL PREVENT THE CENTRAL THREADED SLEEVE AND ATTACHMENT BOLT FROM CONTACTING THE CASTING DURING NORMAL OPERATION. CONTRACTOR SHALL SELECT SPRING COLOR/RATING BASED ON EQUIPMENT WEIGHT. AMBER BOOTH SH, MAINTICS SH, MASON 30 OR EQUIVALENT.

# IV. DUCTWORK AND FITTINGS

A. MATERIAL AND TYPE
1. DUCT CONSTRUCTION SHALL CONFORM TO THE RECOMMENDATIONS OF THE SMACNA HVAC DUCT CONSTRUCTION MANUAL. DUCTBOARD SHALL NOT BE PERMITTED.
2. RIGID. SQUARE DUCTWORK SHALL BE CONSTRUCTED OF LOCK FORMING QUALITY GALVANIZED STEEL SHEETS PER ASTM A527. GALVANIZED COATING SHALL BE NOT LESS THAN 1.25 OUNCES (TOTAL FOR BOTH SIDES) PER SQUARE FOOT OF SHEET. DUCTWORK SHALL BE CLASSIFIED AND CONSTRUCTED SMACNA PRESSURE CLASSES: +2 FOR SUPPLY AND -2 FOR RETURN AND EXHAUST. DEHYDRATED GAUGE SHALL BE 26 GAUGE UP TO 30" AND 22 GAUGE ABOVE 30" IN CROSS SECTIONAL HEIGHT, WIDTH, OR DIAMETER
3. CONCEALED ROUND DUCTS UP TO 12" IN DIAMETER IN PRESSURE CLASSES 2" AND LOWER SHALL BE LONGITUDINAL SEAM CONSTRUCTION.
4. EXPOSED ROUND DUCTWORK OR ROUND ABOVE 12" SHALL BE SPIRAL LOCK_SEAM CONSTRUCTION. ROUND FITTINGS SHALL BE FUSION WELDED BUT SEAM TYPE WITH ALL WELDS CONTINUOUS ALONG SEAMS. ALL DIVIDED FLOW FITTINGS SHALL BE MANUFACTURED AS SEPARATE FITTINGS _ TAP COLLARS WELDED INTO SPIRAL DUCT SECTIONS WILL NOT BE PERMITTED. ALL DIVIDED FLOW FITTINGS 12" IN DIAMETER AND SMALLER SHALL HAVE RADIUSED ENTRANCE PRODUCED BY MACHINE OR PRESS FORMING; ALL DIVIDED FLOW FITTINGS 14" AND LARGER SHALL HAVE CONICAL ENTRANCE PRODUCED BY MACHINE OR PRESS FORMING. ALL DIVIDED FLOW ENTRANCES SHALL BE FREE OF WELD BUILD_UP, BURRS AND IRREGULARITIES. FITTINGS SHALL BE OF THE SAME MANUFACTURER AS THE DUCTWORK.
5. DUCT SEALANT SHALL BE POLYMERIC RUBBER BASE MASTIC, MINERAL IMPREGNATED WOVEN FIBER TAPE WITH ADHESIVE, OR HEAT_SHRINK WITH ADHESIVE. TAPE THICKNESS UP TO 10" = 2"; UP TO 20" = 3"; OVER 20" = 4"
6. INSULATED FLEXIBLE DUCT SHALL BE CLASS 1 AIR DUCT IN ACCORDANCE WITH UL 181 AND SHALL COMPLY WITH NFPA 90A AND 90B. INSULATED FLEXIBLE DUCT SHALL CONSIST OF AN INNER FILM LAYER FOR MINIMUM WORKING PRESSURE OF 6" WATER GAUGE BONDED TO A STEEL OR ALUMINUM SPRING WIRE HELIX, FIBERGLASS INSULATION, AND A VAPOR BARRIER JACKET. INSULATION SHALL HAVE A MAXIMUM U_VALVE OF .23 BTU/HR/SQFT/DEG F AT 75 DEGREES F MEAN TEMPERATURE. VAPOR BARRIER JACKET SHALL HAVE A MAXIMUM VAPOR TRANSMISSION RATE OF 0.1 GRAINS/SQ. FT./HR/INCH HG (PERM). THE ASSEMBLY SHALL HAVE A MAXIMUM FLAME AND SMOKE RATING OF 25/50 PER ASTM E84 AND NFPA 255. FLEXIBLE DUCTS SHALL BE INSTALLED IN AN EXTENDED CONDITION FREE OF SAGS AND KINKS, USING ONLY THE MINIMUM LENGTH REQUIRED TO MAKE THE CONNECTION. ABRUPT BENDS AND TURNS THAT CRIMP THE DUCT AND RESTRICT AIRFLOW SHALL NOT BE PERMITTED. HORIZONTAL SUPPORTS SHALL BE 3/4" WIDE, 22 GAUGE FLAT GALVANIZED STEEL SHEET BANDING MATERIAL. FLEXIBLE DUCTS SHALL BE SUPPORTED ON 36" CENTERS. MAXIMUM LENGTH OF FLEXIBLE DUCT IN PRESSURE CLASS 2" AND BELOW SHALL BE 12 FEET. FLEXIBLE DUCT SHALL NOT BE USED ABOVE INACCESSIBLE CEILINGS.
7. GREASE DUCT SERVING TYPE I HOODS SHALL BE 16 GAUGE BLACK IRON OR 18 GAUGE STAINLESS STEEL WELDED WITH AIR TIGHT SEAM. PROVIDE DUCT CLEANOUTS AT ALL CHANGES OF DIRECTION. FOR INSTALLATIONS THAT WILL RESULT IN A DUCT OR SECTION OF DUCT WITHIN 18" OF COMBUSTIBLE MATERIAL, PROVIDE FIRE-RATED INSULATION AS REQUIRED FOR A ZERO INCH CLEARANCE TO COMBUSTIBLE INSTALLED PER MANUFACTURER'S AND/OR RATING AGENCY REQUIREMENTS COMPLETE WITH ALL REQUIRED PENETRATION TREATMENTS, NUMBER IF INSULATING LAYERS AND APPROVED PREFABRICATED FIRE-RATED ACCESS PANELS. DO NOT PROVIDE VENTED ROOF CURBS FOR FIRE WRAPPED GREASE EXHAUST DUCTS.
8. DISHWASHER EXHAUST DUCT SHALL BE STAINLESS STEEL.

B. DAMPERS
1. DAMPERS SHALL BE SINGLE BLADE BUTTERFLY TYPE IN DUCTS UP TO AND INCLUDING 18" X 12" SIZE; FOR DUCTS LARGER THAN 18" X 12", IN EITHER OR BOTH DIMENSIONS, THE DAMPERS SHALL BE THE MULTI_BLADE TYPE. SINGLE BLADE BUTTERFLY DAMPER SHALL BE CONSTRUCTED OF NOT LESS THAN 16_GAUGE GALVANIZED STEEL BLADE MOUNTED IN A GALVANIZED STEEL FRAME. FOR RECTANGULAR DAMPERS, THE TOP AND BOTTOM EDGES OF THE BLADE SHALL BE CRIMPED TO STIFFEN THE BLADE. DAMPER SHALL BE PROVIDED WITH AN EXTENDED ROD TO PERMIT INSTALLATION OF THE MOTOR REGULATOR.
2. MULTI_BLADE DAMPERS SHALL BE THE OPPOSED BLADE TYPE, CONSTRUCTED OF NOT THAN 16_GAUGE GALVANIZED STEEL BLADES MOUNTED IN GALVANIZED STEEL CHANNEL FRAME. BLADE SPACING SHALL NOT EXCEED 6 INCHES AND THE TOP AND BOTTOM EDGES OF THE BLADES SHALL BE CRIMPED TO STIFFEN THE BLADES. DAMPER BLADES SHALL BE INTERCONNECTED BY RODS AND LINKAGES TO PROVIDE SIMULTANEOUS OPERATION OF ALL BLADES. DAMPERS SHALL BE PROVIDED WITH EXTENDED RODS TO PERMIT INSTALLATION OF DAMPER OPERATORS.
3. DUCT MOUNTED DIAL REGULATORS WITH OPERATING HANDLE SHALL BE PROVIDED OR DAMPERS WHICH ARE LOCATED ABOVE HARD CEILINGS OR INACCESSIBLE LOCATIONS. CONCEALED CEILING MOUNTED DIAL REGULATORS SHALL BE PROVIDED ON VOLUME CONTROL DAMPERS WHICH ARE LOCATED ABOVE HARD CEILINGS. CONCEALED REGULATORS SHALL BE PROVIDED WITHIN DIFFUSER FACE WITH SCREW ADJUSTMENT.
4. PROVIDE DAMPERS AT ALL SUPPLY AND RETURN DUCT RUN OUTS TO EACH AIR DISTRIBUTION DEVICE WITH ACCESSIBLE ADJUSTMENT LEVER OR DIAL-TYPE REGULATOR ACTUATOR.

C. DUCT FITTINGS
1. SPIN_IN COLLARS SHALL BE GALVANIZED STEEL FOR USE WITH RECTANGULAR OR SQUARE SHEET METAL DUCTWORK. SPIN-IN COLLARS SHALL HAVE AIR SCOOP (FOR SUPPLY DUCTS) AND DAMPER (SUPPLY AND RETURN).
2. TURNING VANES SH

# PACKAGED GAS/ELECTRIC ROOFTOP UNIT SCHEDULE

| MARK | SERVES | MODEL | NOM UNIT TONS | CONFIGURATION | QTY COMPR. | FAN CFM | MIN OA CFM | FAN ESP | FAN MOTOR HP | COOLING TOTAL MBH | COOLING SENSIBLE MBH | HEATING MBH OUTPUT | HEATING MBH INPUT | HEATING STAGES | VOLTS/ PHASE |
|---|---|---|---|---|---|---|---|---|---|---|---|---|---|---|---|
| RTU -1 EXISTING | KITHCEHN/BOH | TRANE YHC 120 | 10 | DOWNFLOW | 1.00 | 3500 | 510 | 0.5 | 2 | 116 | 88 | 160 | 200 | 2 | 208/3 |
| RTU-2 EXISTING | DINING | TRANE YHC 120 | 10 | DOWNFLOW | 1.00 | 3650 | 505 | 0.5 | 2 | 116 | 88 | 160 | 200 | 2 | 208/3 |
| NOTE 1:EXISTING UNITS TO REMAIN. | | | | | | | | | | | | | | | |

# EXHAUST FAN SCHEDULE

| TAG | MODEL | MANUF./TYPE | SERVES | CFM | ESP | MOTOR WATTS | RPM | SONES | DRIVE | VOLTS/ PHASE | FAN INTERLOCK |
|---|---|---|---|---|---|---|---|---|---|---|---|
| F-1 EXISTING | SP-A125 | GREENHECK/CEILING | RESTROOM | 100 | 0.13 | 53 | -- | 1.5 | DIRECT | 120/1 | LIGHT SWITCH |
| F-2 EXISTING | SP-A125 | GREENHECK/CEILING | RESTROOM | 100 | 0.13 | 53 | -- | 1.5 | DIRECT | 120/1 | LIGHT SWITCH |
| F-3 | WSGV250 | WOODSTONE / ROOF | PIZZA OVEN | 600 | 0.900 | 350.00 | 1,600 | 8.0 | ECM | 120/1 | SPEED CONTROL DIAL AT OVEN |

1. UNIT MOUNTED DISCONNECT.
2. COORDINATE VOLTAGES WITH ELECTRICAL DRAWINGS. PROVIDE TRANSITION CURB FROM EXISTING 18X18 CURB WITH DUCT TRANSITION FROM 18X12 TO FAN INLET DIMENSION.
3. PROVIDE HEAT SENOR AT OVER PER OVEN MFG RQMNTS WITH SPEED ADJUSTER ABOVE CLG AT HOOD. ADJUSTER KNOB USED TO SET FAN SPEED SHALL VERY TO MAINTAIN TEMP. SET.
4. F-1 IS AN ACCESORY FAN BYT THE OVEN MANUFACTURER- UL762 GREASE RATED FAN FOR HIGH TEMP FLUE EXHAUST.

# AIR DEVICE SCHEDULE

| MARK | LAYOUT BASIS | TYPE | FACE SIZE | MOUNTING | DESIGN FINISH | MATERIAL | NOTES |
|---|---|---|---|---|---|---|---|
| S-1 | TITUS TMS | CEILING DIFFUSER | 24X24/12X12 | 2x2 T-BAR | WHITE | STEEL | 1,4 |
| S-2 | TITUS TMR | ROUND DIFFUSER | | DUCT | WHITE | ALUMINUM | 1 |
| R-1 | TITUS 50 F | 1/2" EGGCRATE RETURN | 24X24 | 2X2 T-BAR | WHITE | ALUMINUM | 2 |

NOTES
1. NECK SIZE TO MATCH DUCT RUN OUT SIZE AS SHOWN ON MECHANICAL PLANS.
2. PROVIDE MANUFACTURER'S ACCESSORY INSULATED PLENUM WITH RUN OUT SIZED CONNECTION.
3. BALANCING DEVICE AT AIR DEVICE FACE
4. BALANCING DEVICE AT RUN OUT TAKEOFF
5. DIVERT BLADES TO 45 DEGREE LATERALLY AND 35 DEGREES BELOW HORIZONTAL.
6. 3-WAY DIFFUSER — END

# AIR BALANCE SCHEDULE

| EXHAUST AIR TAG | DESCRIPTION | CFM | OUTDOOR MAKEUP TAG | DESCRIPTION | CFM |
|---|---|---|---|---|---|
| F-1 | RESTROOM | 125 | RTU-1 | DINING | 500 |
| F-2 | RESTROOM | 125 | RTU-2 | DINNING | 500 |
| F-3 | OVEN EXHAUST | 600 | RTU-3 | KITCHEN/BOH | 300 |
| | EXH TOTAL | -850 | | MAKEUP TOTAL | 1300 |
| | | | TOTAL PRESSURIZATION | 450 | CFM |

# OUTDOOR AIR VENTILATION CALCULATION
ASHRAE 62.1 2004

DIN — 75 SEATS, 1300 SF
75 X 7.5 /.8 = 700 CFM
1300 X .18/.8 = 290 CFM
TOTAL OA REQUIRED = 990 CFM
OA PROVIDED THROUGH RTU-1 & RTU-2 = 1000 CFM

KITCHEN — 900 SF / 1000 X 20 = 18 PEOPLE
18 x 10/.8 = 225 CFM
TOTAL OA REQUIRED = 225 CFM
OA PROVIDED THROUGH RTU-3 = 300 CFM

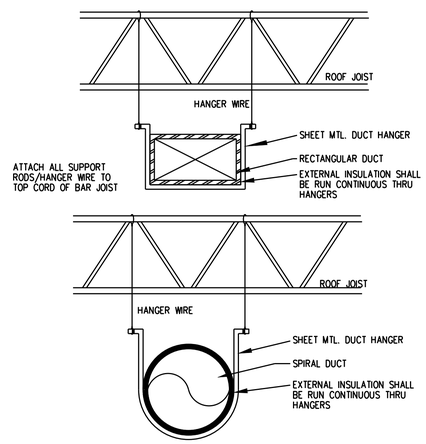


DUCT HANGER DETAIL

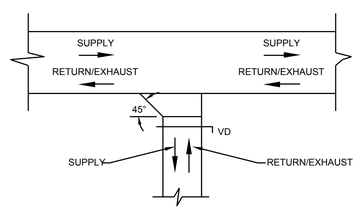


DUCT BRANCH DETAIL

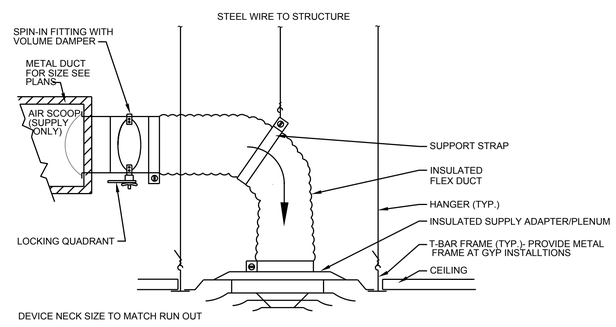


DIFFUSER / RETURN DETAIL

# ABREVIATIONS

| | | | |
|---|---|---|---|
| AC | ABOVE CEILING | HR | HOUR |
| ACC | ACCESS | HW | HOT WATER |
| ACU | AIR CONDITIONING UNIT | HZ | HERTZ |
| AFF | ABOVE FIN ISHED FLOOR | IE | INVERT ELEVATION |
| AHU | AIR HANDLING UNIT | LAT | LEAVING AIR TEMPERATURE |
| AP | ACCESS PANEL | LBS | POUNDS |
| ARCH | ARCHITECT | LOB | LEAVING DRY BULB |
| BDD | BACKDRAFT DAMPER | LWB | LEAVING WET BULB |
| BTUH | BTU PER HOUR | LWT. | LEAVING WATER TEMP. |
| CC | COOLING COIL | MAX | MAXIMUM |
| CCP | CENTRAL CONTROL PANEL | MBH | THOUSAND BTU PER HOUR |
| CD | CEILIN'G DIFFUSER | EVAP | EVAPORATOR |
| CFM | CUBIC FEET PER MINUTE | MIN | MINIMUM |
| CG | CEILING GRID | MOD | MOTORIZED DAMPER |
| CONC. | CONCRETE | MTD | MOUNTED |
| CR | CEILING REGISTER | N.C. | NORMALLY CLOSED |
| CV | CONTROL VALVE | NIC | NOT IN CONTRACT |
| D | DROP | N.O. | NORMALLY OPENED |
| DB | DRY BULB | NO. | NUMBER |
| DIA. | DIAMETER | NPSH | NET POSITIVE SUCTION HEAD |
| DN | DOWN | NTS | NOT TO SCALE |
| DWG | DRAWING | OA | OUTSIDE AIR |
| EA | EXHAUST AIR | OD | OUTSIDE DIAMETER |
| EAT | ENTERING AIR TEMP | OS&Y | OUTSIDE SCREW AND YOKE |
| EDB | ENTERING DRY BULB | PD | PRESSURE DROP |
| EF | EXHAUST FAN | PSI | POUNDS PER SQUARE INCH |
| ELEV | ELEVATION | RA | RETURN AIR |
| ELEC | ELECTRIC | RM | ROOM |
| EWB | ENTERING WET BULB | RPM | REVOLUTION PER MINUTE |
| EWT | ENTERING WATER TEMP | SD | SMOKE DAMPER |
| ESP | EXTERNAL STATIC PRESSUR | SF | SUPPLY FAN |
| SP | STATIC PRESSURE | SF | SUPPLY FAN |
| EXH | EXHAUST | SP | STATIC PRESSURE |
| EXT. | EXTERNAL | SPEC | SPECIFICATIONS |
| F | DEGREES FAHRENHET | SR | SUPPLY REGISTER |
| FC | FLEXIBLE CONNECTION | SS | STAINLESS STEEL |
| FCU | FAN COIL UNIT | TDH | TOTAL DYNAMIC HEAD |
| FD | FIRE DAMPER | TEMP | TEMPERATURE |
| AFG | ABOVE FINISHED GRADE | TG | TRANSFER GRILLE |
| FLD | FLOOR DRAIN | TV | TURNING VANES |
| FPI | FINS PER INCH | TYP. | TYPICAL |
| FPM | FEET PER MINUTE | UH | UNIT HEATER |
| FT | FEET | UC | 3/4" UNDERCUT |
| GV | GATE VALVE | V | VOLTS |
| G | GAUGE | VAV | VARIABLE AIR VOLUME |
| GAL | GALLON | VEL | VELOCITY |
| GPH | GALLONS PER HOUR | VERT. | VERTICAL |
| GPM | GALLONS PER MINUTE | W | WIDTH |
| HP | HORSE POWER | W/ | WITHOUT |
| HT | HEIGHT | W/O | WITHOUT |
| H20 | WATER | WB | WET BULB |
| HORIZ. | HORIZONTAL | W.C. | WATER COLUMN |

# LEGEND

DUCT (SINGLE LINE)
EXISTING DUCT/PIPE
LINED DUCT (SINGLE LINE)
LINED DUCT
EXPOSED SPIRAL W/ PAINT GRIP
SUPPLY/VENTILATION DROP
RETURN DROP
EXHAUST DROP
SUPPLY DIFFUSER
RETURN GRILLE
EXHAUST GRILLE
CAP
VOLUME DAMPER
FIRE DAMPER
MOTORIZED DAMPER
SMOKE DETECTOR
DUCT ELBOW WITH VANES -SINGLE LINE (EXCLUDE VANES IN GREASE EXHAUST)
DUCT ELBOW WITH VANES (EXCLUDE VANES IN GREASE EXHAUST)
RADIUS ELBOW
FLEX DUCT RUN OUT
FLEXIBLE CONNECTION
INLINE CABINET FAN
CEILING CABINET FAN
HORIZ. UNIT HEATER
CEILING UNIT HEATER
INTAKE/VENT HOOD
EXHAUST/FLUE VENT HOOD
ROOF FAN

THERMOSTAT
REMOTE SENSOR
HUMIDISTAT
HOOD ANSUL SYSTEM PULL STATION
OVERFLOW NOZZLE
PIPE DROP
ROOF DRAIN
BALL VALVE
STRAINER
PRV
CHECK VALVE
METER
NAT GAS REGULATOR
3 WAY VALVE
2 WAY VALVE
BUTTERFLY VALVE
CIRCUIT SETTER
FLOW CONTROL VALVE
GAGE
THERMOMETER
PT PLUG
PUMP
DOUBLE CHECK VALVE
RPZ CHECK
FLEX PIPE/CONNECTION
AUTO AIR VENT
FROSTAT
UNION
GAS PIPING
CW PIPING
HW PIPING
HOT WATER RECIRCULATION PIPING
VENT PIPING
SANITARY PIPING (LONG DASH)
GREASE WASTE (SHORT DASH)

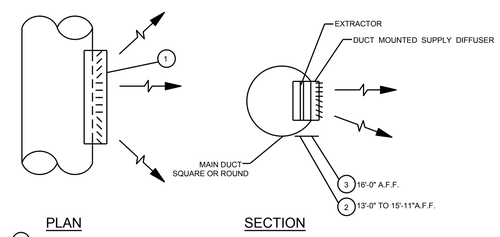


1. ADJUST THROW OF VERTICAL BLADES FOR 1/3 OF AIR STRAIGHT AND 1/3 OF AIR TO 45 DEGREES RIGHT AND 1/3 OF AIR TO 45 DEGREES LEFT.
2. FOR SUPPLY REGISTERS 13'-0" TO 15'-11", ADJUST THROW OF HORIZONTAL BLADES FOR 2/3 OF AIR STRAIGHT AND 1/3 OF AIR TO 22.5 DEGREES DOWN.
3. FOR SUPPLY REGISTERS 16'-0" & HIGHER, ADJUST THROW OF HORIZONTAL BLADES FOR 1/2 OF AIR STRAIGHT AND 1/2 OF AIR TO 22.5 DEGREES DOWN.

SIDEWALL DIFFUSER DETAIL

YOUR PIE
7309 KINGS MOUNTAIN PLACE.
SUITE 640
VESTAVIA, AL 35242


MEP CONTACT:JUSTIN R. HARDY, PE
5014 KINGSBRIDGE PASS
POWDER SPRINGS, GA
Phone: (678) 234-8156


ALABAMA REGISTERED PROFESSIONAL ENGINEER JUSTIN R. HARDY 08-26-16
08-26-16
ARCHITECT/ENGINEER STAMP

| REV. NO. | DATE | DESCRIPTION |
|---|---|---|
| 1 | 8/16/16 | PLANNING/ENGINEERING AND REVIEWS |

PROJECT NO: 2015-1077
DRAWN BY: CC
CHECKED BY: TT
ISSUE DATE: 7-13-16

MECHANICAL SCHEDULES

M0.1

# COMBUSITON AIR NOTES:

1. ROOFTOP UNITS ARE FED COMBUSTION AIR DIRECTLY TO THE FUEL BURNERS COMPLETELY OUTDOORS. THERE IS NO INDOOR GAS-FIRED HVAC.
2. THE WATER EHATER HAS DIRECLTY-PIPED COMBUSTION AIR AND FLUE AS A SEALED-COMBUSTION EQUIPMENT PIECE.
3. THE COOKING EQUIPMENT IS FED COMBUSTION AIR VIA THE MAKEUP AIR UNIT AT 2100 CFM. THE REQUIRED VENTILATION RATE IS 1CFM PER 12 CUBIC FOOT OF AREA. THE KITCHEN SPACE IS 460 SF * 9FT = 4140 CU FT.
   CFM REQUIRED = 345; CFM PROVIDED IS 2100 CFM.

NOTE:

KITCHEN HOOD GREASE DUCT SHALL HAVE A CLEARANCE OF NOT LESS THAN 18" TO COMBUSTIBLE CONSTRUCTION AND SHALL HAVE A CLEARANCE OF NOT LESS THAN 3" TO NONCOMBUSTIBLE CONSTRUCTION AND GYPSUM WALLBOARD ATTACHED TO NONCOMBUSTIBLE STRUCTURES.

CONTRACTOR TO PROVIDE 3M FIRE WRAP (2 LAYERS) FOR ALL GREASE DUCT THAT DOES NOT MEET THE REQUIRE CLEARANCES BY CODE. FIRE WRAP SHALL BE INSTALLED PER MANUFACTURER'S RECOMMENDATIONS.

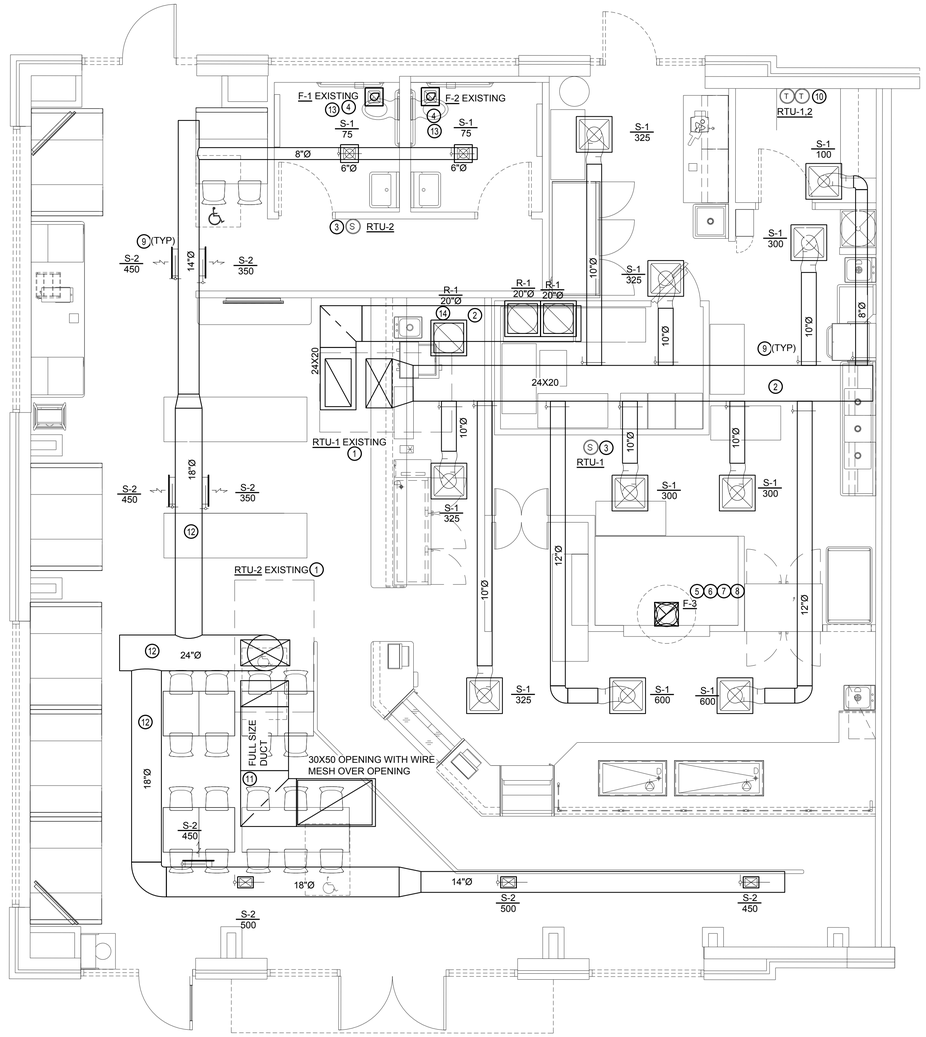


# MECHANICAL FLOOR PLAN

1/4" = 1'-0"

# MECHANICAL KEY NOTES

1. EXISTING AIR HANDLING UNIT. FULL SIZED SUPPLY AND RETURN FROM UNIT. PROVIDE TRANSITION TO SIZE INDICATED ON PLANS.
2. DUCTWORK LOCATED ABOVE CEILING. COORDINATE WITH STRUCTURE.
3. REMOTE SENSOR FOR UNIT DESIGNATED. MOUNT ON WALL AT 48" AFF. COORDINATE LOCATION IN FIELD.
4. EXISTING RESTROOM EXHAUST UP TO ROOF CAP. COORDINATE CONTROLS WITH ELECTRICAL.
5. EXHAUST FAN , LOCATED ON ROOF, FOR PIZZA OVEN FLUE EXHAUST. PROVIDE PER MANUFACTURER REQUIREMENTS. FAN INSTALLED WITH VARIABLE SPEED MOTOR AND WALL ADJUSTER. CONTRACTOR TO BALANCE FAN WITH DIAL ADJUSTER PER MANUFACTURER'S RECOMMENDATION AND MARK THE BALANCED DIAL POSITION ON THE SWITCH. REFER TO INSTALLATION MANUAL FOR BALANCING METHOD AND PRESSURIZATION SET POINT.
6. PROVIDE 16 GA. EXTERNALLY WELDED LIQUID TIGHT PIZZA OVEN FLUE EXHAUST DUCT. EXTEND UP TO ROOF MOUNTED PIZZA OVEN FLUE EXHAUST FAN.
7. PIZZA OVEN FLUE EXHAUST SHALL BE FIRE WRAPPED WHEN WITHIN 18" TO COMBUSTIBLES. PROVIDE 3M FIRE WRAP WHERE REQUIRED.
8. WELD DUCT TO PIZZA OVEN FLUE EXHAUST COLLAR.
9. PROVIDE MANUAL VOLUME CONTROL DAMPER. (TYPICAL)
10. 7- DAY PROGRAMMABLE THERMOSTAT FOR UNIT DESIGNATED. COORDINATE LOCATION WITH OWNER AND OFFICE FURNITURE. WALL MOUNTED AT 48" AFF.
11. FULL SIZE DOWN FROM UNIT. PROVIDE LINED RETURN PLENUM WITH OPENING ON TOP AS SHOWN. PROVIDE MESH COVER FOR RETURN OPENING.
12. EXPOSED SPIRAL SUPPLY DUCT SHALL BE INTERNALLY LINED WITH 1" INSULATION. SIZE SHOWN ON PLANS ARE CLEAR INSIDE DIMENSIONS.
13. RESTROOM EXHAUST SHALL BE INTERLOCKED WITH LIGHTING. COORDINATE WITH ELECTRICAL.
14. PROVIDE LINED PLENUM.

# MECHANICAL GENERAL NOTES:

1. COORDINATE LOCATIONS WHERE NEW DUCTWORK CROSSES EXISTING CONDUITS, ETC. PROVIDE OFFSETS AS REQUIRED.
2. INSTALL FIRE DAMPERS AS REQUIRED WHENEVER NEW OR EXISTING DUCTWORK PASSES THROUGH FIRE RATED WALLS OR FLOORS. RETURN AIR OPENING IN FIRE RATED WALLS SHALL BE EQUIPPED WITH FIRE DAMPERS. SEE ARCH. DRAWINGS FOR RATED WALLS.
3. CONTRACTOR TO VERIFY FIELD CONDITIONS PRIOR TO BEGINNING WORK. NOTIFY ENGINEER WITH ANY DISCREPANCIES BETWEEN DRAWINGS AND EXISTING CONDITIONS.
4. COORDINATE EXACT LOCATIONS OF EQUIPMENT ON ROOF. PROVIDE DUCTED OUTSIDE AIR INTAKE DUCTS TO MAINTAIN 10'-0" CLEARANCE FROM EXHAUST OR FLUE DISCHARGE OPENINGS
5. COORDINATE ALL WORK WITH ALL OTHER TRADES, RESOLVE CONFLICT PRIOR TO INSTALLATION OF EQUIPMENT. COORDINATE NEW DIFFUSER LOCATIONS WITH LIGHT FIXTURES, SPRINKLER HEADS AND PIPING, CEILING GRID LOCATION PRIOR TO INSTALLATION.
6. ALL NEW HVAC EQUIPMENT INCLUDING FANS, AND RTU SHALL BE PROPERLY SUPPORTED FROM THE STRUCTURE. MOUNT ALL ROOFTOP UNITS ON CURBS. PROVIDE VIBRATION ISOLATORS ON ALL EQUIPMENT. ALL EQUIPMENT SHALL BE APPROVED FOR ITS SPECIFIC INTENDED INSTALLATION AND OPERATION.
7. DIFFUSER PER SCHEDULE. EACH SHALL BE PROVIDED WITH BALANCING DEVICE AT DIFFUSER RUNOUT WHERE POSSIBLE AND DEVICE FACE-MOUNTED DAMPER OTHERWISE.
8. THERMOSTATS FOR NEW RTU'S SHALL BE PROGRAMMABLE STYLE BY HONEYWELL. SUBMIT SHOP DRAWINGS AND VERIFY MODEL NUMBER PRIOR TO PURCHASE. THERMOSTATS MOUNTED AT 48" AFF
9. PROVIDE ROOF TOP AIR HANDLING UNIT AS INDICATED ON DRAWINGS. VERIFY EXACT LOCATION WITH ROOF PLAN AND STRUCTURAL DRAWINGS. PROVIDE GAS PIPING CONNECTION AND COORDINATE ELECTRICAL CONNECTION. MOUNT ALL UNITS ON 14" ROOF CURB.
10. PROVIDE NEW GAS SERVICE FROM NEW METER UP TO RTU'S AND EQUIPMENT GAS PIPING TO BE SCHEDULE 40 BLACK STEEL. PROVIDE METER AND PIPING CONNECTION TO ALL AHU'S DUCT FURNACES, HOT WATER HEATER, MAKE UP AIR UNITS AND KITCHEN COOKING EQUIPMENT. GAS PIPING FOR KITCHEN COOKING EQUIPMENT TO BE EQUIPPED WITH A SOLENOID SHUT-OFF VALVES CONNECTED TO HOOD FIRE SUPPRESSION SYSTEM DUCTWORK FOR GRILL HOOD (TYPE I) SHALL BE WELDED 16 GAGE BLACK IRON, OR STAINLESS STEEL.
11. ROOFTOP UNIT FANS AND OUTDOOR AIR DAMPERS SHALL BE INTERLOCKED WITH EXHAUST FANS.
12. ALL MECHANICAL WORK SHALL BE INSTALLED IN ACCORDANCE WITH THE LOCALLY ADOPTED MECHANICAL CODE WITH ALL CURRENTLY APPLICABLE ERRATA AND AMENDMENTS.
13. CONTRACTOR SHALL COORDINATE MECHANICAL WORK WITH ALL OTHER TRADES PRIOR TO FABRICATION AND INSTALLATION. DO NOT SCALE FROM DRAWINGS FOR ANY EXACT DIMENSION. SEE ARCHITECTURAL DRAWINGS AND REFLECTED CEILING PLANS FOR EXACT LOCATIONS OF DOORS, WINDOWS, AIR DISTRIBUTION DEVICES.
14. COORDINATE THE SIZE OF ALL WALL OPENINGS, ROOF OPENINGS AND EQUIPMENT PADS WITH ACTUAL EQUIPMENT PURCHASED. ALL MECHANICAL ITEMS EXTENDING THRU WALL & ROOF SHALL BE FLASHED AND COUNTER FLASHED. ALL ROOF CURBS FOR MECHANICAL EQUIPMENT SHALL BE BY MECHANICAL CONTRACTOR.
15. ROUTE FULL SIZE CONDENSATE DRAINS WITH P-TRAP AND VENT ON OUTLET SIDE. PIPE 12" AWAY FROM UNIT. SPILL ON CONCRETE SPLASH BLOCK WHERE ROUTED TO ROOF.
16. DUCT SMOKE DETECTORS IN SUPPLIES AND RETURNS PER LOCALLY ADOPTED CODE SHALL BE FURNISHED & WIRED BY DIV 16, INSTALLED BY DIV. 15
17. ALL DUCTWORK SIZES ARE INSIDE CLEAR FREE AREA. INCREASE SIZE WHERE REQUIRED TO INCLUDE INTERNAL INSUALTION
18. MOTOR STARTERS AND DISCONNECTS SHALL BE FURNISHED UNDER DIVISION 15 AND INSTALLED BY THE ELECTRICAL CONTRACTOR. COORDINATE ELECTRICAL CHARACTERISTICS OF HVAC EQUIPMENT AND CONTROL SYSTEM REQUIREMENTS (VOLTAGE/PHASE, SIGNAL TYPE, AUXILIARY CONTACTS ETC…) PRIOR TO PURCHASING.
19. CONTRACTOR SHALL NOTE THAT THE DRAWINGS ARE DIAGRAMMATIC IN NATURE AND DO NOT INDICATE ALL OFFSETS, TRANSITIONS, OR OTHER APPURTENANCES REQUIRED FOR A COMPLETE HVAC SYSTEM. PROVIDE ALL EQUIPMENT NECESSARY FOR A COMPLETE SYSTEM.
20. ALL PIPING AND DUCTWORK SHALL RUN CONTINUOUSLY THROUGH FLOORS, ROOFS AND PARTITIONS. ENGINEER WILL REVIEW DUCT/PIPING SHOP DRAWINGS AT THE REQUEST OF THE CONTRACTOR. NO EXHAUST HOOD SHALL BE LEFT OPEN INTO BUILDING SPACE.
21. THIS CONTRACTOR SHALL PROVIDE & INSTALL ALL MISCELLANEOUS STEEL AS REQUIRED FOR INSTALLATION OF ALL MECHANICAL ITEMS.
22. ALL DIFFUSERS LOCATED IN CEILINGS WITH A NON-RETURN AIR PLENUM SHALL BE INSULATED AIR TIGHT WITH FOIL FACES 1 INCH FIBERGLASS INSULATION.
23. CONTRACTOR SHALL PURCHASE AIR FILTERS FROM THE OWNER-APPROVED AIR FILTER VENDOR WHERE OWNER HAS A SUPPLIER. ALL FILTERS SHALL BE REPLACED IMMEDIATELY PRIOR TO SUBSTANTIAL COMPLETION.
24. CONTRACTOR SHALL SUBMIT THE TAB AGENCY, 2 WEEKS PRIOR TO SCHEDULE TESTING AND BALANCING OF THE SYSTEM, AN UP-TO-DATE SET OF HVAC DRAWINGS, AND RELATED PRODUCT DATASUBMITTALS SUCH AS HVAC UNITS, FANS, DIFFUSERS, and CONTROL DIAGRAMS.
25. THESE DRAWINGS ARE SCHEMATIC IN NATURE AND ARE NOT INTENDED TO SHOW ALL POSSIBLE CONDITIONS. IT IS INTENDED THAT A COMPLETE MECHANICAL SYSTEM IS PROVIDED WITH ALL NECESSARY EQUIPMENT AND CONTROLS.
26. REFER TO ARCHITECTURAL PLANS FOR ADDITIONAL SYSTEM REQUIREMENTS.
27. TESTING AND BALANCE: CONTRACTOR SHALL CONTRACT AN INDEPENDENT TESTING AND BALANCING COMPANY TO TEST THE EQUIPMENT AND ADJUST THE HVAC SYSTEM TO OBTAIN THE DESIGN AIR FLOWS AS SHOWN ON PLANS. THE TAB AGENCY SHALL BE NEBB CERTIFIED AND SHALL SUBMIT TAB REPORT AS REQUIRED BY THE NEBB.
28. ALL SUPPLY, RETURN AND OUTSIDE AIR DUCTWORK SHALL BE INSULATED. DUCT LINER SHALL BE 1-1/2" ELASTOMERIC RUBBER (ARMAFLEX OR EQ.); EXTERNAL INSULATION SHALL BE 2" THICK, 1 LB.CU.FT. DENSITY, FIBERGLASS TYPE, FOIL-FACED DUCT WRAP, COMMERCIAL GRADE. ALL EXPOSED DUCTWORK SHALL BE LINED. R-VALUE SHALL BE ADJUSTED PER LOCAL ENERGY CODE REQUIREMENTS. EXPOSED DUCT SHALL BE PROVIDED WITH APINT GRIP FINISH.
29. DUCTWORK SHALL BE GALVANIZED STEEL FABRICATED PER SMACNA STANDARDS. VOLUME DAMPERS SHALL BE INSTALLED AT ALL DUCT BRANCHES AND DIFFUSER TAKE OFFS TO BE ABLE TO BALANCE THE AIR SYSTEM. DUCT SHALL BE HUNG WITH 1" WIDE DUCT STRAPS.
30. EACH AC UNIT SHALL BE CONTROLLED WITH A WALL MOUNTED 7-DAY PROGRAMMABLE THERMOSTAT WITH AUTO CHANGE OVER TO PROVIDE OCCUPIED/UNOCCUPIED MODES OF OPERATION. PROVIDE CLEAR PLASTIC COVER WITH LOCKING KEY ALL THERMOSTATS.
31. ALL PIPING SHALL BE INSULATED COMPLETELY AIR TIGHT WITH NO EXPOSED INSULATION MATERIAL. PROVIDE INSULATION OUTSIDE OF PIPING HANGERS OR SUPPORTS WITH RIGID INSULATION AND PIPING SADDLES AT SUPPORTS SUFFIECIENT TO PREVENT DEFORMATION OF INSULATION.
32. PROVIDE SIESMIC FITTINGS AND SUPPORTS AS REQUIRED BY THE LOCAL BUILDING CODE AND SIESMIC CHARACTERISTICS FOR THE CONSTRUCTION LOCATION.

YOUR PIE

YOUR PIE
7309 KINGS MOUNTAIN PLACE.
SUITE 640
VESTAVIA, AL 35242


MEP CONTACT:JUSTIN R. HARDY, PE
5014 KINGSBRIDGE PASS
POWDER SPRINGS, GA
Phone: (678) 234-8156


ALABAMA LICENSED 35260 PROFESSIONAL ENGINEER JUSTIN R. HARDY

08-26-16

ARCHITECT/ENGINEER STAMP

| REV NO | DATE | DESCRIPTION |
|---|---|---|
| 1 | 8/16/16 | PLANNING STUDIES AND PERMITS |

PROJECT NO: 2015-1077

DRAWN BY: CC

CHECKED BY: TT

ISSUE DATE: 7-13-16

MECHANICAL FLOOR PLAN

M1.0

## MECHANICAL ROOF KEY NOTES:

1. EXISTING ROOF TOP UNIT TO REMAIN.
2. 10"Ø ROOF CAP FOR RESTROOM EXHAUST.
3. PIZZA OVEN EXHAUST FAN SHALL BE MOUNTED PER MANUFACTURER'S RECOMMENDATIONS
4. MAINTAIN MINIMUM 10'-0" CLEARANCE TO ALL FRESH AIR INTAKES.

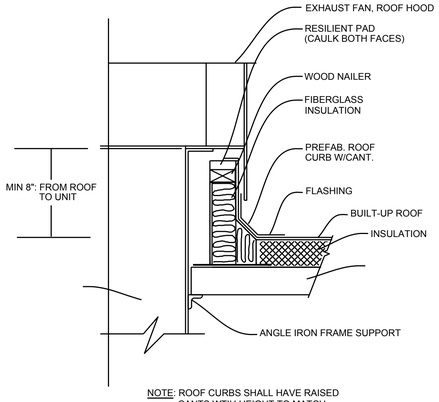


NOTE: ROOF CURBS SHALL HAVE RAISED CANTS WTIH HEIGHT TO MATCH ROOF INSULATION

## RTU CURB DETAIL

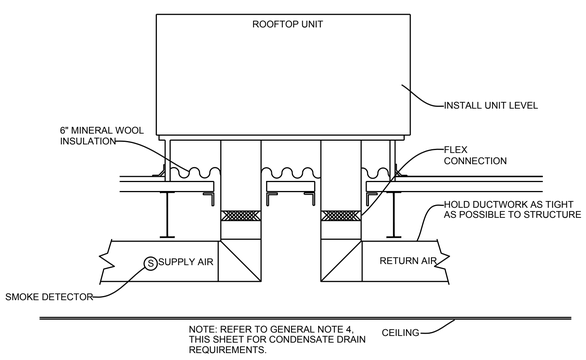


NOTE: REFER TO GENERAL NOTE 4, THIS SHEET FOR CONDENSATE DRAIN REQUIREMENTS.

## RTU INSTALLATION DETAIL

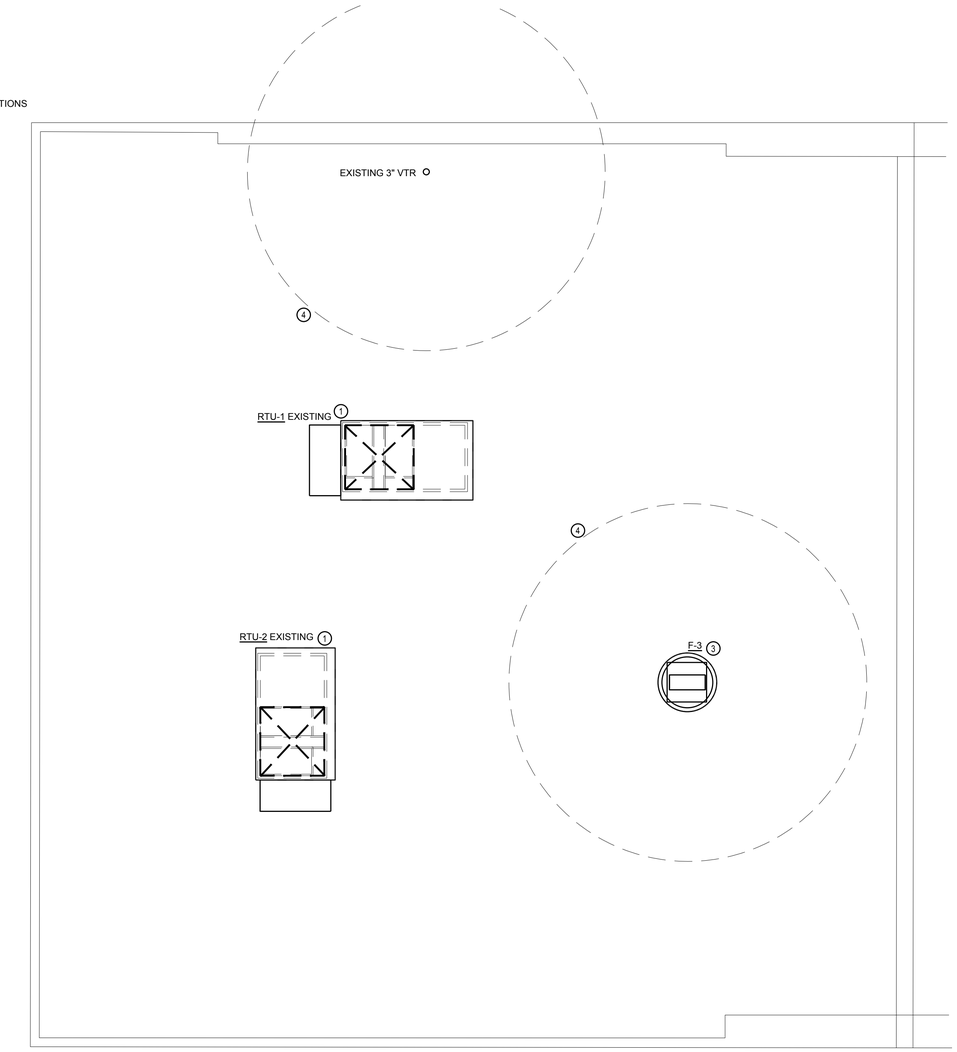


## MECHANICAL ROOF PLAN

1/4" = 1'-0"

YOUR PIE

YOUR PIE
7309 KINGS MOUNTAIN PLACE.
SUITE 640
VESTAVIA, AL 35242


MEP CONTACT: JUSTIN R. HARDY, PE
5014 KINGSBRIDGE PASS
POWDER SPRINGS, GA
Phone: (678) 234-8156


ALABAMA LICENSED PROFESSIONAL ENGINEER NO. 35230 JUSTIN R. HARDY

08-26-16

ARCHITECT/ENGINEER STAMP

| REV. NO. | DATE | DESCRIPTION |
|---|---|---|
| 1 | 8/16/16 | PLANNING/ENGINEERING AND REVISIONS |

PROJECT NO: 2015-1077
DRAWN BY: CC
CHECKED BY: TT
ISSUE DATE: 7-13-16

MECHANICAL ROOF PLAN

M1.1

## WASTE AND VENT KEY NOTES:

1. CONNECT TO EXISTING GREASE WASTE LINE TO EXISTING 1500 GALLON INTERCEPTOR.
2. EXISTING 4" SANITARY MAIN APPROXIMATE LOCATION OF EXISTING WASTE LINE. CONTRACTOR TO VERIFY EXACT LOCATION.
3. EXISTING 3" VENT THROUGH ROOF.
4. INDIRECT WASTE ROUTED TO FIXTURE. TYPICAL.

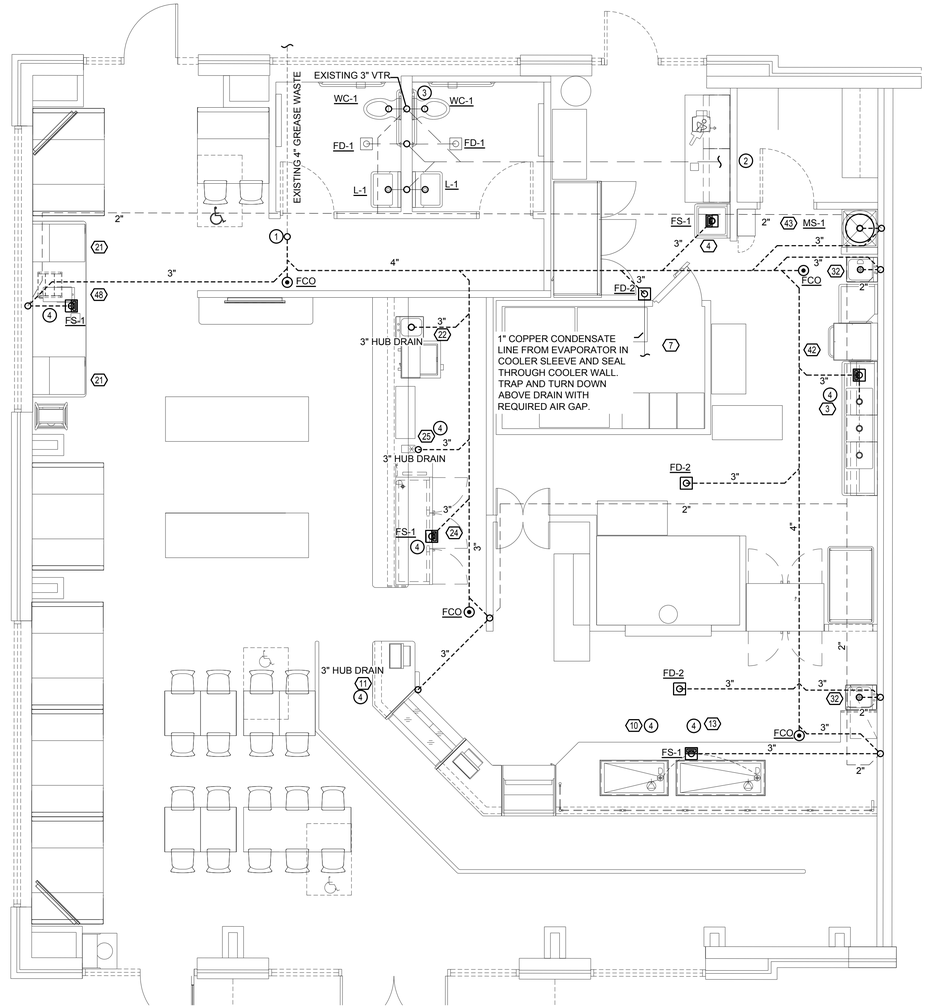


## SANITARY WASTE AND VENT FLOOR PLAN

1/4" = 1'-0"

YOUR PIE

7309 KINGS MOUNTAIN PLACE.
SUITE 640
VESTAVIA, AL 35242


MEP CONTACT: JUSTIN R. HARDY, PE
5014 KINGSBRIDGE PASS
POWDER SPRINGS, GA
Phone: (678) 234-8156


ALABAMA LICENSED PROFESSIONAL ENGINEER JUSTIN R. HARDY

08-26-16

ARCHITECT/ENGINEER STAMP

| REV. NO. | DATE | DESCRIPTION |
|---|---|---|
| 1 | 8/16/16 | PLANNING/ENGINEERING AND PERMITS |

PROJECT NO: 2015-1077

DRAWN BY: CC

CHECKED BY: TT

ISSUE DATE: 7-13-16

PLUMBING WASTE PLAN

P1.0

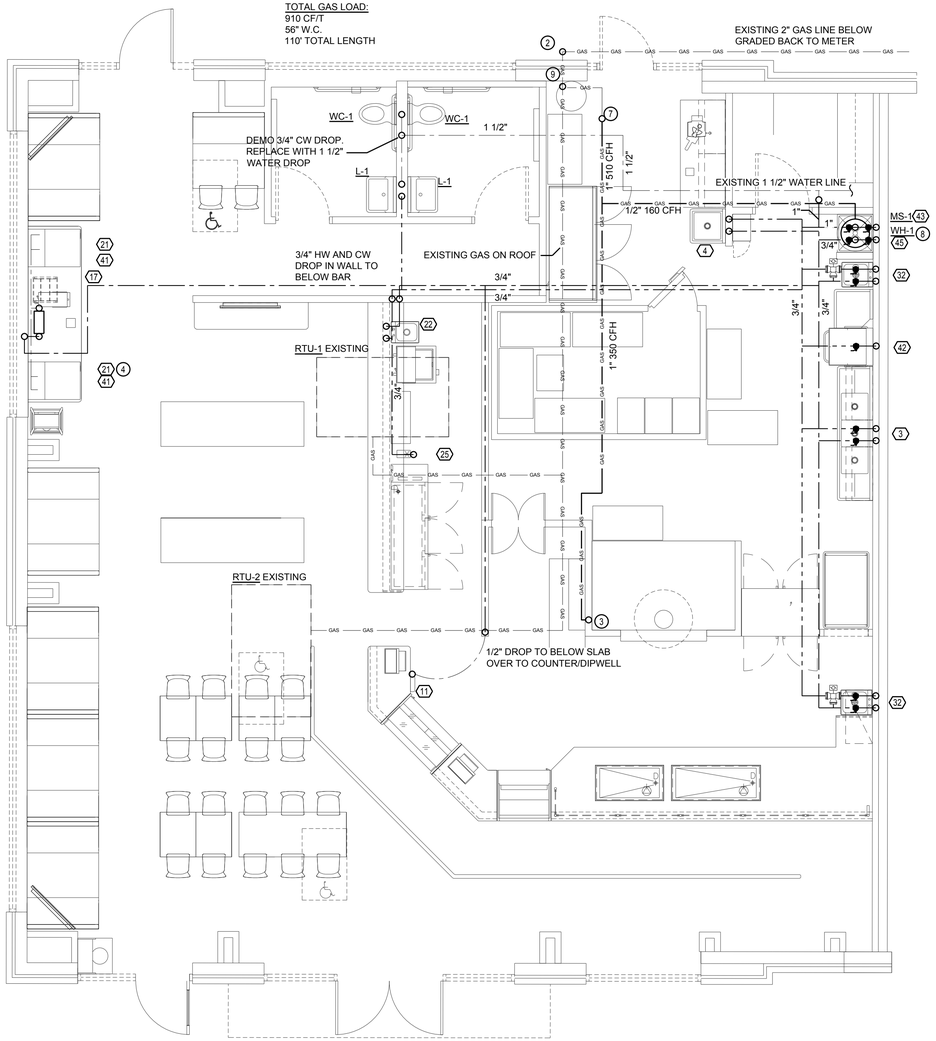


## DOMESTIC WATER AND GAS FLOOR PLAN

1/4" = 1'-0"

## DOMESTIC/GAS KEY NOTES:

1. CONNECT NEW 3/4" DOMESTIC WATER SERVICE TO LANDLORD PROVIDED 3/4" CW MAIN. CONTRACTOR TO VERIFY EXACT LOCATION.
2. EXISTING GAS STUB UP FROM BELOW GRADE.
3. 1.5" GAS DOWN TO KITCHEN EQUIPMENT BELOW. PROVIDE MANUAL SHUT-OFF VALVE AND EMERGENCY OVEN PULL/SOLENOID BELOW CEILING LEVEL. ROUTE PIPE INTO AS HIGH AS POSSIBLE (AFTER GAS VALVES) WALL WITH CONCEALED DROP TO OVEN CONNECTION. INSTALL WITHIN 2-1/2" PIPE SLEEVE AT ENTIRE LENGTH OF CONCEALED PIPING OPEN TO KITCHEN AREA AT PIPE PENETRATION.
4. PROVIDE MASTER EVERPURE FILTER SYSTEM FOR DRINK DISPENSER, ICE MAKER, AND TEA BREWER WITH PRESSURE BOOSTER WHERE MUNICIPAL PRESSURE BELOW 40PSI. COORDINATE WITH SOFT DRINK VENDOR FOR SPECIFIC REQUIREMENTS. INSTALL UNDER CABINET AND ROUTE BELOW CABINETRY TO EACH FIXTURE INDICATED.
5. PROVIDE MIXING VALVE AT HAND WASH SINKS AND LAVATORIES. TEMPERATURE SETTING TO BE AT 110°F.
6. ASME TRAP PRIMER ABOVE CEILING ROUTED TO FLOOR DRAINS IN RESTROOMS.
7. CONNECT TO EXISTING 2" GAS LINE ABOVE CEILING.
8. ROUTE WATER HEATER FLU VENT AND COMBUSTION AIR INTAKE OUT THROUGH WALL PER MANUFACTURERS RECOMMENDATIONS.
9. GAS DOWN THROUGH ROOF.

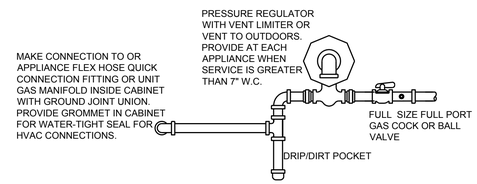


NOTE:
CONTRACTOR SHALL VERIFY ALL GAS FIRED EQUIPMENT CONNECTION LOCATIONS IN THE FIELD PRIOR TO INSTALLING ANY GAS PIPE MAINS OR BRANCHES. INSTALL THE GAS TRAIN SUCH THAT ACCESS PANEL SWINGSHALL NOT BE IMPEDED.

## GAS PIPING EQUIPMENT CONNECTION DETAIL.

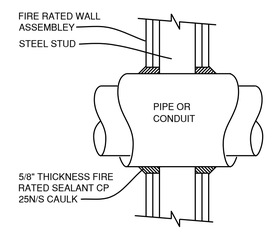


NOTE:
1. THE CAULK IS TO BE FORCED INTO THE ANNULAR SPACE TO THE MAXIMUM EXTENT POSSIBLE FLUSH W/ THE EXTERIOR OF THE PENETRATION SURFACE.
2. FINISH CAULKING W/ A 5/8" MINIMUM BEAD OF CP 25N/S CAULK APPLIED TO THE PERIMETER OF THE CONDUIT/PIPE AT ITS EGRESS FROM WALL ASSEMBLY.
3. 3. THE MAXIMUM ANNULAR SPACE IS NOT TO EXCEED 3/16" .
4. 4. INSTALL 3M FIRE STOP ON BOTH SIDES OF THE WALL ASSEMBLY AT PENETRATIONS.
5. 5. THESE RECOMMENDATIONS ARE BASED ON PRODUCT PERFORMANCE PER ASTM E-814 (UL-1479) FIRE TEST & UL THROUGH-PENETRATION SYSTEM #147.

## PIPE PENETRATION DETAIL

## GAS PIPING NOTES:

1. GAS PIPING SIZED FOR THE TOTAL CONNECTED LOAD ±100' FROM METER TO FARTHEST CONNECTION, 7" WATER COLUMN 0.6 SPECIFIC GRAVITY, 0.5" PRESSURE LOSS.
2. GAS PIPING SHALL BE BLACK STEEL OR AS PERMITTED BY CODE.
3. GAS PIPING CONNECTIONS SHALL BE THREADED UNLESS OTHERWISE REQUIRED BY CODE.
4. EXTERIOR GAS PIPING SHALL RECEIVE ONE COAT EACH OF A RUST AND WEATHER RESISTANT PRIMER AND TOP COAT. COORDINATE WITH ARCHITECT FOR COLOR.
5. ALL GAS BURNING EQUIPMENT SHALL BE INSTALLED PER NFPA #58, NFPA #54 (L.P.G.) OR NFPA #96 (COMMERCIAL COOKING EQUIPMENT).
6. GAS PIPE SIZES 2-1/2" AND GREATER SHALL BE WELDED, IF REQUIRED BY CODE.
7. GAS CONNECTIONS PER ANSI ZZ1.69
8. ALL VALVES AND FITTINGS SHALL BE LINE SIZE. GAS PIPING BRANCHES SHALL NOT BE REDUCED IN SIZE UNTIL THE POINT OF FINAL CONNECTION TO THE EQUIPMENT BEING SERVED.
9. ALL GAS PIPING LOCATED IN CONCEALED SPACES SHALL BE SLEAVED AND VENTED TO TO THE ATMOSPHERE.
10. KITCHEN EQUIPMENT PROVIDER TO PROVIDE NATURAL GAS REGULATORS FOR GAS POWERED KITCHEN EQUIPMENT. PLUMBING CONTRACTOR TO INSTALL REGULATORS.

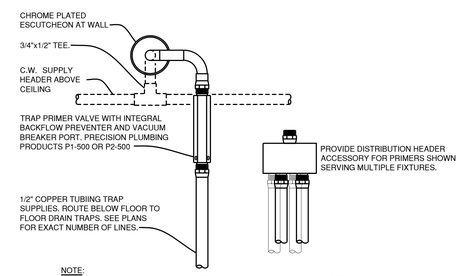


NOTE:
MOUNT THE TRAP PRIMER VALVE ABOVE CEILING AND AT LEAST ONE FOOT ABOVE THE FLOOD LEVEL RIM OF THE HUB DRAIN FLOOR FOR EVERY 20 FEET OF PRIMER LINE. PROVIDE WITH ACCESS PANEL WHERE LOCATED ABOVE A HARD CEILING). PROVIDE PRIMER SERVICE FOR ALL FLOOR DRAINS AND HUB DRAINS.

## TRAP PRIMER DETAIL

YOUR PIE

YOUR PIE
7309 KINGS MOUNTAIN PLACE.
SUITE 640
VESTAVIA, AL 35242

MEP CONTACT: JUSTIN R. HARDY, PE
5014 KINGSBRIDGE PASS
POWDER SPRINGS, GA
Phone: (678) 234-8156

ALABAMA LICENSED PROFESSIONAL ENGINEER 26 39230 JUSTIN R. HARDY
08-26-16
ARCHITECT/ENGINEER STAMP

| REV. NO. | DATE | DESCRIPTION |
|---|---|---|
| 1 | 8/16/16 | PLANNING/ENGINEERING AND PERMITS |

PROJECT NO: 2015-1077
DRAWN BY: CC
CHECKED BY: TT
ISSUE DATE: 7-13-16

DOMESTIC WATER PLAN

P1.1

# GENERAL PLUMBING NOTES

1. THESE DRAWINGS ARE SCHEMATIC IN NATURE AND ARE NOT INTENDED TO SHOW ALL POSSIBLE CONDITIONS. IT IS INTENDED THAT A COMPLETE PLUMBING AND FIRE PROTECTION SYSTEM BE PROVIDED WITH ALL NECESSARY EQUIPMENT, APPURTENANCES AND CONTROLS COMPLETELY COORDINATED WITH ALL DISCIPLINES. ALL PARAMETERS GIVEN IN THESE DOCUMENTS SHALL BE STRICTLY CONFORMED TO. ANY ITEMS AND LABOR REQUIRED FOR A COMPLETE PLUMBING AND FIRE PROTECTION SYSTEM IN ACCORDANCE WITH ALL APPLICABLE CODES, STANDARDS, LOCAL AUTHORITIES AND THESE CONTRACT DOCUMENTS SHALL BE FURNISHED WITHOUT INCURRING ANY ADDITIONAL COST TO THE OWNER. CAREFULLY REVIEW ALL CONTRACT DOCUMENTS AND THE DESIGN OF OTHER TRADES BEFORE PREPARING SHOP DRAWINGS.
2. COORDINATE ALL WORK WITH ARCHITECTURAL, STRUCTURAL, MECHANICAL, AND ELECTRICAL TRADES. PIPE ROUTING SHOWN IS DIAGRAMMATIC. PROVIDE ALL OFFSETS, ETC. TO AVOID INTERFERENCES WITH EQUIPMENT, PIPING, DUCT WORK, LIGHTS, CONDUITS, AND STRUCTURAL ITEMS, ETC...
3. ALL DRAINAGE PIPING AND POTABLE WATER PIPING SHALL BE CONCEALED INSIDE WALLS AND PIPE CHASES OR ABOVE CEILINGS AS HIGH AS POSSIBLE.
4. EXPOSED PIPING AT FIXTURES SHALL BE SECURED TO WALLS CONSTRAINED AGAINST ANY FREE-MOVEMENT OF PIPING.
5. CONTRACTOR SHALL MAKE FINAL CONNECTION TO ALL DOMESTIC WATER, SANITARY SEWERS, STORM DRAINS, FIRE SUPPLY AND GAS SERVICES AT APPROXIMATELY 5'-0" FROM BUILDING STRUCTURE UNLESS OTHERWISE NOTED.
6. REFER TO ARCHITECTURAL PLANS AND ELEVATIONS FOR LOCATION OF ALL PLUMBING FIXTURES. EXACT LOCATION OF ALL PLUMBING FIXTURES MUST BE VERIFIED IN FIELD PRIOR TO INSTALLATION. FINAL LOCATIONS AND HEIGHTS SHALL BE AS DIRECTED BY ARCHITECT.
7. PLUMBING CONTRACTOR SHALL MAKE FINAL CONNECTION TO ALL EQUIPMENT INDICATED ON DRAWINGS INCLUDING KITCHEN EQUIPMENT PER MANUFACTURER'S SPECIFIC INSTALLATION INSTRUCTIONS. FINAL CONNECTION SHALL INCLUDE ANY ADAPTERS, NIPPLES SHUTOFF VALVES, PRESSURE REGULATING VALVES, SHOCK ABSORBERS, BACKFLOW PREVENTION DEVICES, ETC. CONTRACTOR SHALL COMPLETELY REVIEW EACH EQUIPMENT ITEM'S INSTALLATION INSTRUCTIONS PRIOR TO COMMENCEMENT OF WORK. ALL ITEMS REQUIRED FOR INSTALLATION ARE INCLUDED IN THE PLUMBING CONTRACTOR'S SCOPE.
8. DO NOT RUN PLUMBING OR FIRE PROTECTION PIPING THROUGH TRANSFORMER VAULTS, ELECTRICAL CLOSETS, ELECTRICAL SWITCHGEAR ROOMS, ELEVATOR EQUIPMENT ROOMS, COMPUTER ROOMS OR TELEPHONE ROOMS. DO NOT RUN ANY PIPING ABOVE ELECTRICAL PANELS OR OTHER ELECTRICAL/CONTROLS COMPONENTS.
9. ALL COMMERCIAL FIXTURES SPECIFIED BY AN EQUIPMENT PROVIDER SHALL OVERRIDE ANY SPECIFIED PLUMBING FIXTURES ON THIS PLAN. THE PLUMBER SHALL COORDINATE FINAL REQUIRED FIXTURES WITH OWNER/EQUIPMENT SUPPLIER. VERIFY CONNECTION SIZE AND LOCATION OF ALL ITEMS WITH KITCHEN EQUIPMENT DRAWINGS.
10. PROVIDE AN EXPANSION JOINT ON ALL PIPING SYSTEMS THAT CROSS BUILDING EXPANSION JOINTS.
11. CONNECT TO EXISTING SANITARY AND KITCHEN WASTE STUB WHERE AVAILABLE. CONNECTIONS TO EXISTING UTILITIES SHALL BE COORDINATED IN THE FIELD FOR EXACT LOCATION AND INVERT AVAILABILITY.
12. PROVIDE GAS CONNECTION TO EXISTING METER WHERE POSSIBLE. PROVIDE CONNECTION TO ROOF MOUNTED EQUIPMENT AND TO KITCHEN EQUIPMENT AS INDICATED ON KITCHEN EQUIPMENT DRAWING. PROVIDE SHUT-OFF VALVES AT ALL POINTS OF CONNECTION.
13. ALL PLUMBING FIXTURES, PIPING, AND MATERIALS SHALL BE LISTED OR LABELED AND INSTALLED AS PER A RECOGNIZED APPROVAL AGENCY.
14. ALL WORK WITHIN THIS SCOPE OF WORK SHALL COMPLY WITH ALL CITY, STATE AND NATIONAL PLUMBING CODES. ALL WORK SHALL CONFORM TO BUILDING STANDARDS.
15. PLUMBING CONTRACTOR SHALL VERIFY VOLTAGE, PHASE AND WIRE SIZE OF PLUMBING EQUIPMENT REQUIRING ELECTRICAL CONNECTION WITH ELECTRICAL CONTRACTOR PRIOR TO PURCHASE OF EQUIPMENT
16. COORDINATE ALL FLOOR PENETRATIONS WITH STRUCTURAL DRAWINGS. THE PLUMBER SHALL SET SLEEVES IN FLOORS AND WALLS AND ATTACHMENTS FOR HANGERS AS CONSTRUCTION PROGRESSES. COORDINATE THE EXACT SIZE AND LOCATION OF ALL SLEEVES WITH STRUCTURAL ENGINEER. ALL PENETRATIONS MUST BE SEALED AND HELD AS TIGHT TO COLUMNS OR WALLS AS POSSIBLE.
17. COORDINATE ALL UNDERGROUND PIPING WITH GRADE BEAMS, WALL FOOTINGS, COLUMN FOUNDATIONS AND OTHER STRUCTURAL CONDITIONS.
18. ALL DRAINAGE PIPING AND VENT PIPING SHALL SLOPE AT 1/8 INCH PER FOOT UNLESS OTHERWISE NOTED.
19. EXACT LOCATION OF ALL CLEANOUTS MUST BE COORDINATED AND APPROVED BY ARCHITECT PRIOR TO INSTALLATION.
20. SANITARY VENTS MUST TERMINATE A MINIMUM OF 10 FT. FROM OR 2 FT. ABOVE AIR INTAKES, WINDOWS OR VENT SHAFTS.
21. ALL HOSE BIBBS AND WASHDOWN FAUCETS ARE REQUIRED TO HAVE PROPER BACKFLOW PREVENTERS WHERE HOSES ARE ATTACHED AND LEFT UNATTENDED. CHEMICAL FEED SYSTEMS AT COMMERCIAL KITCHENS SHALL HAVE DEDICATED BACKFLOW PREVENTERS SEPARATE FROM WASHO-DOWN OR HOSE BIB FIXTURES.
22. PROVIDE 12" x 12" ACCESS PANELS FOR SHOCK ABSORBERS, TRAP PRIMERS AND ALL VALVES LOCATED ABOVE NON-ACCESSIBLE CEILINGS AND INSIDE PIPE CHASES. EXACT LOCATION MUST BE COORDINATED WITH ARCHITECTURAL DRAWINGS AND APPROVED BY ARCHITECT PRIOR TO INSTALLATION. ALL ACCESS PANELS SHALL BE LOCATED SO THAT THEY ARE NOT VISIBLE TO PUBLIC VIEW.
23. PIPING INSULATION SHALL BE PROVIDED WITH CONTINUOUS AIR-TIGHT VAPOR BARRIER WITH NO LOOSE TAPE OR EXPOSED INSULATION MATERIAL. CONDENSATE PIPING SHALL BE PROVIDED WITH ELECTROMETRIC INSULATION. ALL INSULATION AND WRAPPING JOINTS AND SEEMS SHALL BE PROVIDED WITH 1" OVERLAP AND MANUFACTURER RECOMMENDED, AIR-TIGH MASTIC AT ANY INSULATION OR VAPOR BARRIER JOINTS. INSULATION SHALL BE INSTALLED WITH FULL THICKNESS, FREE OF ANY INSULATION COMPRESSION. PROVIDE RIGID INSULATION SECTION AT ALL PIPING HANGERS.
24. PROVIDE A VALVE BYPASS AT ALL EQUIPMENT INCLUDING WATER HEATERS, STORAGE TANKS WATER SOFTENERS, BOOSTER PUMPS, FIRE PUMPS, ETC... FOR MAINTENANCE OF EQUIPMENT.
25. PROVIDE BALL VALVES AT ALL BRANCH LINES SERVING MULTIPLE FIXTURES. PROVIDE ACCESSIBLE BALL VALVE AT EACH FIXTURE CONNECTION (IN ADDITION TO ANY EXPOSED STOPS) OR FIXTURE HEADER BRANCH CONNECTION.
26. ALL HAND-WASHING BASINS AND LAVATORIES INSTALLED SHALL BE EQUIPPED WITH HOT AND COLD WATER THROUGH A MIXING VALVE UNLESS A TEMPERED WATER SUPPLY IS INDICATED.
27. INSTALL VACUUM BREAKERS A MINIMUM OF 6" ABOVE THE FLOOD LEVEL RIM OF A FIXTURE SERVED WITH NO SHUT-OFF DEVICES BEYOND THE DISCHARGE OF THE VACUUM BREAKER.
28. THE USE OF RISER CLAMPS TO SUPPORT VERTICAL PIPE ALONG WALLS, OR COLUMNS IS PROHIBITED. PROVIDE B-LINE 22 STRUT & B-2000 PIPE CLAMPS
29. CONTRACTOR SHALL HANG ALL PIPING FROM THE STRUCTURAL MEMBERS (W-SHAPES, BAR JOISTS) WITH CLAMP-TYPE CONNECTIONS. PIPING SHALL NOT BE SUPPORTED FROM THE METAL DECK. STRUCTURAL MEMBERS SHALL NOT BE CUT OR DRILLED.
30. ALL JOINTS, ANNULAR SPACES, OR OPENINGS INTO HOLLOW OR INACCESSIBLE AREAS ARE TO BE CLOSED TO 1/32" OR LESS FOR FOOD SERVICE AREAS.
31. ALL ANNULAR SPACES ARE TO BE CLOSED AND ESCUTCHEON PLATES AT HAND WASHING AREAS MUST BE SECURED.
32. INSTALL VACUUM BREAKERS A MINIMUM OF 6" ABOVE THE FLOOD LEVEL RIM OF THE FIXTURE SERVED WITH NO SHUT-OFF DEVICES BEYOND THE DISCHARGE OF THE VACUUM BREAKER.
33. ALL JOINTS, ANNULAR SPACES, OR OPENINGS INTO HOLLOW OR INACCESSIBLE AREAS ARE TO BE CLOSED TO 1/32" OR LESS FOR FOOD SERVICE AREAS.

# BACKFLOW PREVENTER MATRIX

| MODEL | SERVES | TYPE | IPC LISTING |
|---|---|---|---|
| WATTS 009 | WATER SERVICE (OUTDOOR) | RPZ | ASSE 1013 |
| WATTS SD-3 | CARBONATOR | CO2 CHECK | ASSE 1022 |
| WATTS 7 | FOOD SERVICE WATER FILTER | DOUBLE CHECK | ASSE 1024 |
| WATTS 7 | RINSE FAUCETS (MULTI COMP SINK) | DOUBLE CHECK | ASSE 1024 |
| INTEGRAL TO FIXTURE | HOSE BIB | DOUBLE CHECK | ASSE 1052 |
| WATTS 7 | CHEMICALS DISP. | DOUBLE CHECK | ASSE 1024 |
| WATTS SD-3 | CARBONATED DRINK DISPENSER | CO2 CHECK | ASSE 1022 |
| WATTS 7 | ICE MAKER | DOUBLE CHECK | ASSE 1024 |
| WATTS 7 | NON-CARB DRINK DISPENSER | DOUBLE CHECK | ASSE 1024 |
| WATTS 288A | WATER HEATER VACUUM BREAKER | VACUUM BREAKER | ASSE 1001 |

NOTES:
1. PROVIDE HANGING ALUMINUM TAG FOR EACH BFP WITH THE BFP DESIGNATOR AND LISTING ETCHED IN AS INDICATED ABOVE.
2. TENANT SHALL PROVIDE TESTING FOR EACH BFP AT THE TIME OF ISNTALLATION/RELOCATION AND ANNUALLY THEREAFTER
3. TESTING PROCEDURES TO BE PERFOMED PER LOCAL CODE
4. MOUNT WITH BFP ACCESSIBLE FOR TESTING/REPAIR AT A MINIMUM 1" ABOVE FLLOR AND MAXIMUM 5' ABOVE FLOOR
5. PROVIDE ACCESS PANELS FOR BFP THAT ARE INSTALLED WITHIN WALLS WHERE SURFACE MOUNTING IS NOT POSSIBLE.
6. PROVIDE IN ACCORDANCE WITH THE REQUIREMENTS OF LOCAL CODE.
7. ALL BFP MUST BE LEAD FREE ASSEMBLY

END

# PLUMBING FIXTURE SCHEDULE

| MARK | FIXTURE | MANUFACTURER | CATALOG NO. | COLOR | WASTE SIZE | WATER COLD | WATER HOT | WATER TEMP. | REMARKS |
|---|---|---|---|---|---|---|---|---|---|
| WC-1 | WATER CLOSET ADA COMPLIANT | KHOLER | K-3493 HIGHLINE | WHITE | 3" | 1/2" | -- | -- | WHITE, ELONGATED 17" HIGH BOWL, PRESSURE ASSIST 1.6 GAL. PER FLUSH, PROVIDE WITH FLUSHMATE INTELLI-FLUSH BATTERY OPERATER AUTO-FLUSHING, K-4650 ELONGATED TOILET SEAT. |
| U-1 | URINAL ADA COMPLIANT | KHOLER | K-4904 KINGSTON | WHITE | 2" | 3/4" | | | WHITE, VITREOUS CHINA, 1.0 GAL. PER FLUSH, 24" TO RIM, SLOAN SENSOR FLUSH VALVE MODEL 8180, BATTERY POWERED . |
| L-1 | ADA LAVATORY | KHOLER | K-2032 GREENWICH | WHITE | 1.5" | 1/2" | 1/2" | -- | DELTA FAUCET 21C154, ON 4" CTRS, 0.5 GPM FLOW RESTRICTOR. GRID DRAIN. ADA COMPLIANT. |
| MS-1 | MOP BASIN | FLORESTONE | MODEL #10 36X36 | WHITE | 3" | 1/2" | 1/2" | -- | ONE PIECE SERVICE BASIN; AND 3.0 GPM FLOW RESTRICTOR; DELTA 28T910 STAINLESS STEEL MOP HOLDER; 28T911 HEAVY DUTY 31" LONG REINFORCED HOSE, BRASS COUPLING, STAINLESS STEEL HANGER BRACKET, W/RUBBER GRIP. DELTA 28T9 WITH INTEGRAL VACUUM BREAKER. |
| FD-1 | FLOOR DRAIN | JR SMITH | 2010-B-P050 | -- | LINE SIZE | -- | -- | -- | CAST IRON BODY AND FLASHING COLLAR; 6" NICKEL BRONZE ROUND STRAINER; VANDAL PROOF GRATE; P-050 TRAP PRIMER OPTION. |
| FD-2 | FLOOR DRAIN | JR SMITH | 2005A-B-F37 | -- | LINE SIZE | -- | -- | -- | 7" DIA. POLISHED BRONZE ADJUSTABLE STRAINER, WITH FUNNEL TYPE, ADJUSTIBLE STRAINER. |
| FD-3 | FLOOR DRAIN | JR SMITH | 2210 | -- | LINE SIZE | -- | -- | -- | CAST IRON BODY WITH NICKEL BRONZE GRATE, 8-1/2" ROUND GRATE; SEDIMENT BUCKET; VANDAL PROOF GRATE |
| FS-1 | FLOOR SINK | JR SMITH | 3007-12 | -- | LINE SIZE | -- | -- | -- | 10-1/2" SQ. TOP, 6" DEEP, DOME STRAINER W/SEDIMENT BUCKET, WITH MEMBRANE CLAMP. HALF GRATE |
| FCO | FLOOR CLEANOUT | JR SMITH | 4020 | -- | LINE SIZE | -- | -- | -- | ROUND, POLISHED BRONZE TOP WITH SURFACE MEMBRANE CLAMP. |
| WCO | WALL CLEANOUT | JR SMITH | 4420 | -- | LINE SIZE | -- | -- | -- | ROUND, POLISHED BRONZE TOP. |
| MXV-1 | MIXING VALVE | POWERS | LM495 | -- | -- | -- | 1/2" | -- | MIXING VALVE, SOLID BRASS WITH INTEGRAL CHECK. THREADED UNION CONNECTIONS. |

NOTES:
1. CONTRACTOR SHALL PROVIDE AND INSTALL A WALL CARRIER FOR EACH FIXTURE WHICH IS WALL HUNG, UNLESS OTHERWISE NOTED. PROVIDE APPROPRIATE CARRIER PER FIXTURE TYPE AND REQUIREMENTS.
2. CONTRACTOR SHALL PROVIDE AND INSTALL WATTS, ZURN, P.P.P.INC. (OR EQUAL) TRAP PRIMERS TO SERVE ALL FLOOR DRAINS REQUIRING PROTECTION PER CODE.
3. CONTRACTOR SHALL PROVIDE AND INSTALL SHOCK ARRESTORS FOR BRANCH PIPING SERVING FIXTURES WITH QUICK CLOSING VALVES. SHOCK ARRESTORS SHALL BE BY P.P.P., ZURN OR EQUAL, SIZED PER POI REQUIREMENTS.
4. ACCEPTABLE ALTERNATE MANUFACTURERS FOR ITEMS INCLUDING BUT NOT LIMITED TO:
   WATER CLOSETS, LAVS AND URINALS: AMERICAN STANDARD, KOHLER, ELJER, CRANE, MANSFIELD, TOTO
   FLOOR SINKS, FLOOR DRAINS AND CLEANOUTS: WADE, J.R. SMITH, ZURN.
   HOSE BIBBS/WALL HYDRANTS: WOODFORD, ZURN, CHICAGO FAUCET, T&S BRASS.
5. ENCLOSE ALL SUPPLIES AND P-TRAPS OF BARRIER FREE LAVATORIES WITH A PROTECTIVE INSULATING MATERIAL AND A SMOOTH JACKET (TRAP WRAP OR EQUAL).

# WATER HEATER SCHEDULE

| MARK | TYPE | LAYOUT BASIS | STORAGE GALLONS | GAS INPUT MBH | OUTPUT MBH | ELECTRICAL CAPACITY (KW) | GPH RECOVERY @80 DEG RISE | TEMP SETTING | ELEC VOLT/PHASE | EXPANSION TANK ACCPETANCE (GAL) |
|---|---|---|---|---|---|---|---|---|---|---|
| WH-1 | GAS STORAGE | RHEEM HE-55-160 | 55 | 160 | 152 | -- | 173.00 | 140 | -- | 5 |

1. PROVIDE ARMSTRONG LST-12 EXP TANK AND T&P SET AT 150 PSI DISCHARGE TO HUB DRAIN. DO NOT ROUTE INTO DRAIN PAN.
2. PROVIDE 2" DEEP DRAIN PAN BENEATH STORAGE TYPE WATER HEATER TO ENCASE ENTIRE WATER HEATER FOOTPRINT.
3. PROVIDE CONDENSATE NUETRALIZER AND CONDENSATE TRAP FOR WATER HEATER. ROUTE CONDENSATE TO MOP SINK. SEAL PENETRATION AT PAN WITH CAULKING.
5. PROVIDE REGULATOR FOR WATER HEATER SERVED BY GAS PIPING PRESSURE GREATER THAN 10" WC. PROVIDE GAS SHUTOFF AT EACH WATER HEATER
6. PROVIDE INDIVIDUAL FIXTURE MIXING VALVES SET TO 110 DEGREES FOR HAND WASHING FIXTURES.
7. PROVIDE GAVLANIZED FLUE AND COMBUSTION AIR VENTING WITH ACCESSORY TERMINATION KIT PER MFG INSTRUCTION.
8. PROVIDE PVC FLUE AND COMBUISTION AIR VENT ITH WITH ACCESSORY TERMINATION KIT PER MFG INSTRUCTION.

NOTES:
1) WATER HEATER (SET AT 140° F) SHALL MEET ALL LATEST LOCAL & NATIONAL ENERGY CONSERVATION STANDARDS.
2) INSTALL WATER HEATER PER MANUFACTURERS REQUIREMENTS.
3) FLUE AND AIR INTAKE SHALL BE 3" PVC. INSTALL THROUGH THE THE BACK WALL OF THE BUILDING. TOTAL EQUIVALENT LENGTH OF INTAKE AND EXHAUST TO NOT EXCEED 40'.
4) ALL WATER PIPING SHALL BE INSULATED. SEE SPECIFICATIONS.
5) PLUMBER SHALL PROVIDE COMBUSTION ANALYSIS TO VERIFY ACCEPTABLE CO AND CO2 FLUE GAS LEVELS. REFER TO INSTALLATION MANUAL. RESULTS OF ANALYSIS SHALL BE DELIVERD TO THE ENGINEER FOR APPROVAL PRIOR TO TURN-OVER.
6) CONDENSATE LINE MUST BE PITCHED AT LEAST 1/4" PER FOOT (0.64 cm per 0.3 m)TO PROPERLY DRAIN. IF THIS CANNOT BE DONE OR A VERY LONG LENGTH OF CONDENSATE HOSE IS USED - INCREASE THE CONDENSATE LINE TO A MINIMUM OF 1" (2.5 CM) ID AND PLACE A TEE IN THE LINE AFTER THE CONDENSATE NEUTRALIZER TO PROPERLY REDUCE VACUUM LOCK IN THE DRAIN LINE.
7) PLASTIC PIPE SHOULD BE THE ONLY MATERIAL USED FOR THE CONDENSATE LINE. STEEL, BRASS, COPPER OR OTHERS WILL BE SUBJECT TO CORROSION OR DETERIORATION.

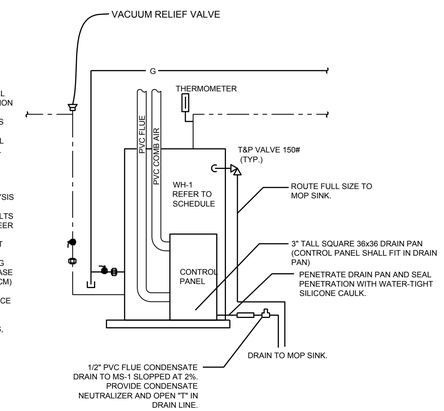


## COMMERCIAL NATURAL GAS WATER HEATER DETAIL

# EQUIPMENT SCHEDULE

| ITEM NO. | QTY. | EQUIPMENT CATEGORY | MANUFACTURER | MODEL NUMBER | PLUMBING REQ. SUPPLY H | SUPPLY C | WASTE | MECHANICAL REQUIREMENTS GAS | CONN. TYPE | BTU | COMMENTS | |
|---|---|---|---|---|---|---|---|---|---|---|---|---|
| 1 | 1 | PIZZA OVEN | WOODSTONE | WS-FD-9660 | | | | O | 1" | 350,000 | RE: PLUMBING PLANS | 1 |
| 3 | 1 | 3 COMPARTMENT SINK | ADVANCE TABCO | FE-3-1812-18RL-X | | | 1 1/2" | | | | RE: PLUMBING PLANS | 3 |
| 3A | 1 | PRE-RINSE UNIT WITH FAUCET | T&S | B-0133/ADF06-B | 1/2" | 1/2" | | | | | RE: PLUMBING PLANS | 3A |
| 4 | 1 | 1-COMPARTMENT SINK | ADVANCE TABCO | FE-1-1812-X | | | 1 1/2" | | | | RE: PLUMBING PLANS | 4 |
| 4A | 1 | FAUCET W/12" NOZZLE | T&S | B-0231 | 1/2" | 1/2" | | | | | RE: PLUMBING PLANS | 4A |
| 7 | 1 | WALK-IN COOLER | NORLAKE | CUSOTM | | | 1" | | | | RE: PLUMBING PLANS | 7 |
| 10 | 1 | DROP-IN COLD PAN, 1-PAN | DUKE | ADI-1MD | | | 1" | | | | RE: PLUMBING PLANS | 10 |
| 13 | 1 | DROP-IN COLD PAN, 6-PAN | DUKE | ADI-6MD | | | 1" | | | | RE: PLUMBING PLANS | 13 |
| 21 | 1 | ICE MAKER | HOSHIZAKI | KM-650-MAH | 1/2" | | 3/4" | | | | FILTERED SUPPLY | 21 |
| 21A | 1 | WATER FILTER ASSEMBLY | | | 1/2" | | | | | | RE: PLUMBING PLANS | 21A |
| 22 | 2 | DROP-IN HOT FOOD WELL, ELECTRIC | HATCO | HWB-4QTD | | | 3/4" | | | | RE: PLUMBING PLANS | 22 |
| 25 | 1 | GLASS RINSER | GLASTENDER | UMRF | 1/2" | | 1/2" | | | | RE: PLUMBING PLANS | 25 |
| 32 | 2 | HAND SINK | SUNFAB | SFHSSS-1715 | 1/2" | 1/2" | 2" | | | | 1/2" ARMAFLEX ON DRAIN PIPE | 32 |
| 41 | 1 | COKE MACHINE | | | 1/2" | | | | | | FILTERED SUPPLY | 41 |
| 42 | 1 | DISH MACHINE | | | | | | | | | RE: PLUMBING PLANS | 42 |
| 43 | 1 | MOP SINK | | | 1/2" | 1/2" | 3" | | | | RE: PLUMBING PLANS | 43 |
| 45 | 1 | HOT WATER HEATER | RHEEM | HE55-160 | 3/4" | 3/4" | | O | | 160,000 | RE: PLUMBING PLANS | 45 |
| 49 | 2 | ICE TEA BREWER | | | 1/2" | | | | | | FILTERED SUPPLY | 49 |

YOUR PIE

YOUR PIE
7309 KINGS MOUNTAIN PLACE.
SUITE 640
VESTAVIA, AL 35242


MEP CONTACT: JUSTIN R. HARDY, PE
5014 KINGSBRIDGE PASS
POWDER SPRINGS, GA
Phone: (678) 234-8156


ALABAMA LICENSED No. 18930 PROFESSIONAL ENGINEER JUSTIN R. HARDY
08-26-16
ARCHITECT/ENGINEER STAMP

| REV. NO. | DATE | DESCRIPTION |
|---|---|---|
| 1 | 8/16/16 | PLANNING/ZONING AND PERMITS |

PROJECT NO: 2015-1077
DRAWN BY: CC
CHECKED BY: TT
ISSUE DATE: 7-13-16

PLUMBING SCHEDULES

P2.0

# ELECTRICAL LEGEND

| | | | |
|---|---|---|---|
| | FLUORESCENT TROFFER, TYPE AS NOTED | | DUPLEX RECEPTACLE 18" AFF OR AS NOTED, NEMA 5-20R |
| | FLUORESCENT TROFFER, TYPE AS NOTED PROVIDE WITH EMERGENCY BALLAST | WP | WEATHER PROOF DUPLEX RECEPTACLE 18" AFF OR AS NOTED, NEMA 5-20R |
| | FLUORESCENT TROFFER, TYPE AS NOTED | USB | WEATHER PROOF DUPLEX RECEPTACLE AFF AS NOTED, NEMA 5-20R W/ USB CHARGER |
| | FLUORESCENT TROFFER, TYPE AS NOTED PROVIDE WITH EMERGENCY BALLAST | | DUPLEX RECEPTACLE ABOVE COUNTER OR AS NOTED, NEMA 5-20R |
| | RECESSED CAN FIXTURE, TYPE AS NOTED | | QUAD RECEPTACLE 18" AFF OR AS NOTED, NEMA 5-20R |
| | RECESSED CAN FIXTURE, TYPE AS NOTED PROVIDE WITH EMERGENCY BALLAST | IG | DUPLEX RECEPTACLE 18" AFF OR AS NOTED, NEMA 5-20R |
| | FLUORESCENT STRIP FIXTURE | | SPECIAL PURPOSE RECEPTACLE 18" AFF OR AS NOTED, SEE SCHEDULE |
| | WALL MOUNTED FIXTURE, TYPE AS NOTED | | WALL / CEILING MOUNTED JUNCTION BOX |
| | PENDANT FIXTURE, TYPE AS NOTED | 60/3/1 | UNFUSED DISCONNECT SWITCH RATING/POLES/NEMA RATING |
| | PENDANT FIXTURE, TYPE AS NOTED PROVIDE WITH EMERGENCY BALLAST | 60/3/3R/40 | FUSED DISCONNECT SWITCH RATING/POLES/NEMA RATING/FUSE SIZE |
| | TRACK LIGHT FIXTURE, TYPE AS NOTED | | MOTOR |
| | EMERGENCY LIGHT | | GROUND |
| | EXIT/EMERGENCY LIGHT COMBINATION | | TRANSFORMER |
| | CEILING MOUNTED EXIT SIGN | M | UTILITY GRADE METER |
| | WALL MOUNTED EXIT SIGN | TVSS | TRANSIENT VOLTAGE SURGE SUPPRESSOR |
| $ | SINGLE POLE SWITCH, 44" AFF | | TELEPHONE OUTLET, PROVIDE 4" BOX SINGLE GANG PLASTER RING, 3/4" C ABOVE CEILING |
| $$ | TWO SINGLE POLE SWITCHES GANGED TOGETHER FOR INNER/OUTER CONTROL OF LAMPS, 44" AFF | | DATA OUTLET, PROVIDE 4" BOX SINGLE GANG PLASTER RING, 3/4" C ABOVE CEILING |
| $$$ | THREE SINGLE POLE SWITCHES GANGED TOGETHER 44" AFF | TV | TELEVISION/CABLE OUTLET |
| $3 | THREE WAY SWITCH, 44" AFF | | TELEPHONE OUTLET, PROVIDE 4" BOX FLUSH IN FLOOR, 3/4" C ABOVE CEILING |
| $3$3 | TWO THREE WAY SWITCHES GANGED TOGETHER FOR INNER/OUTER CONTROL OF LAMPS, 44" AFF | | DATA OUTLET, PROVIDE 4" BOX FLUSH IN FLOOR, 3/4" C ABOVE CEILING |
| $4 | FOUR WAY SWITCH, 44" AFF | | DOOR HOLD-OPEN DEVICE |
| $D | WALL BOX DIMMER 1000W UNLESS NOTED DIFFERENTLY 44" AFF | T | TRANSFORMER, SEE ONE LINE |
| $WP | WEATHER PROOF SWITCH, 44" AFF | S | SPEAKER STROBE |
| $M | MOTOR RATED SWITCH, 44" AFF OR AS NOTED | | HORN |
| $OS | COMBINATION SWITCH AND OCCUPANCY SENSOR, 44" AFF TYPE WSD OR EQUAL | | PULL STATION |
| $T | DIGITAL TIMER SWITCH, 44" AFF | | FIRE ALARM STROBE, MIN 75 CANDELA CEILING / WALL MOUNT |
| OS | CEILING MOUNTED OCCUPANCY SENSOR | | DUCT MOUNTED SMOKE DETECTOR |
| OS | WALL MOUNTED OCCUPANCY SENSOR, 44" AFF | S | SMOKE DETECTOR |
| TC | TIME CLOCK | H | HEAT DETECTOR |
| LC | LIGHTING CONTACTOR | TS | TAMPER SWITCH |
| | PHOTO CELL | FS | FLOW SWITCH |
| S | 8" CONE SPEAKER IN CEILING EC TO PROVIDE BLACK SPEAKER | | RACEWAY CONCEALED IN WALL OR ABOVE CEILING |
| S | 8" CONE SPEAKER IN WALL EC TO PROVIDE BLACK SPEAKER | | RACEWAY EXPOSED |
| V | VOLUME CONTROL | | RACEWAY CONCEALED IN FLOOR SLAB, BELOW SLAB OR GRADE BELOW SLAB OR GRADE, OR UNDER RAISED ACCESS FLOOR |
| | PLYWOOD EQUIPMENT BACKBOARD 4'x8' UNLESS NOTED OTHERWISE | | DENOTES CONDUIT TURNING UP IN PLAN VIEW |
| CCTV | CLOSED CIRCUIT TELEVISION CAMERA | | DENOTES CONDUIT TURNING DOWN IN PLAN VIEW |
| XXXX | SHORT CIRCUIT AVAILABLE CURRENT | | STUB UP |

(NOTE: ALL SYMBOLS SHOWN MAY NOT APPEAR ON DRAWINGS AND ARE USED AS APPLICABLE TO THIS PROJECT)

# ABBREVIATIONS

| | |
|---|---|
| A, AMPS | AMPERES |
| A/C | AIR CONDITIONER |
| AC | ALTERNATING CURRENT |
| AF | AMPERE FRAME |
| AFF | ABOVE FINISHED FLOOR |
| AFG | ABOVE FINISHED GRADE |
| AIC | AMPERE INTERRUPTING CURRENT |
| AL | ALUMINUM |
| ANSI | AMERICAN NATIONAL STANDARDS INSTITUTE |
| AWG | AMERICAN WIRE GAUGE |
| BC | BARE COPPER |
| BKBD | BACKBOARD |
| C | CONDUIT |
| CB | CIRCUIT BREAKER |
| CKT | CIRCUIT |
| CU | COPPER |
| DIST | DISTRIBUTION |
| DN | DOWN |
| DP | DISTRIBUTION PANEL |
| DWG | DRAWING |
| EB | ENCASED BURIAL |
| EC | EMPTY CONDUIT |
| EEW | ENERGIZED ELECTRICAL WORK |
| EGC | EQUIPMENT GROUNDING CONDUCTOR |
| ELR | END-OF-LINE RESISTOR |
| EWC | ELECTRIC WATER COOLER |
| <E> | EXISTING |
| <ER> | EXISTING TO REMAIN |
| <EX> | EXISTING |
| FA | FIRE ALARM |
| FAA | FIRE ALARM ANNUNCIATOR |
| FACP | FIRE ALARM CONTROL PANEL |
| FLA | FULL LOAD AMPERES |
| GND | GROUND |
| GALV | GALVANIZED |
| GRS | GALVANIZED RIGID STEEL |
| GFCI | GROUND FAULT CIRCUIT INTERRUPTER |
| GFI | GROUND FAULT INTERRUPTER |
| HD | HEAT DETECTOR |
| HP | HORSEPOWER |
| IMC | INTERMEDIATE METAL CONDUIT |
| ISC | INTERRUPTING SHORT CIRCUIT |
| IG | ISOLATED GROUND |
| INST | INSTANTANEOUS |
| JB | JUNCTION BOX |
| KAIC | KILO (THOUSAND) AMPERES INTERRUPTING CAPACITY |
| KCMIL | KILO (THOUSAND) CIRCULAR MILS |
| KV | KILO (THOUSAND) VOLTS |
| KVA | KILO (THOUSAND) VOLT-AMPERES |
| KW | KILO (THOUSAND) WATTS |
| KWH | KILO (THOUSAND) WATT-HOURS |
| LFMC | LIQUID-TIGHT FLEXIBLE METAL CONDUIT |
| MCB | MAIN CIRCUIT BREAKER |
| MCM | THOUSAND CIRCULAR MILS |
| MCCB | MOLDED CASE |
| MLO | MAIN LUGS ONLY |
| N | NEUTRAL |
| NEC | NATIONAL ELECTRICAL CODE |
| NESC | NATIONAL ELECTRICAL SAFETY CODE |
| NIC | NOT IN CONTRACT |
| NL | NIGHT LIGHT |
| NO | NORMALLY OPEN, NUMBER |
| NTS | NOT TO SCALE |
| PNL | PANELBOARD |
| PVC | POLYVINYL CHLORIDE |
| RGS | RIGID GALVANIZED STEEL CONDUIT |
| RMC | RIGID METALLIC CONDUIT (GALVANIZED) |
| RMS | ROOT-MEAN-SQUARE |
| RNC | RIGID NON-METALLIC CONDUIT |
| SCA | SHORT CIRCUIT AVAILABLE |
| SWBD | SWITCHBOARD |
| SWGR | SWITCHGEAR |
| TBD | TO BE DETERMINED |
| TCP | TEMPERATURE CONTROL PANEL |
| TD | TIME DELAY |
| TEL | TELEPHONE |
| TVSS | TRANSIENT VOLTAGE SURGE SUPPRESSION |
| TYP | TYPICAL |
| UG | UNDERGROUND |
| UON | UNLESS OTHERWISE |
| | UNDERGROUND PULLBOX |
| V | VOLTS |
| VA | VOLT-AMPERES |
| VFD | VARIABLE FREQUENCY DRIVE |
| WH | WATER HEATER |
| WP | WEATHERPROOF |
| WT | WATERTIGHT |
| XFMR | TRANSFORMER |

# ELECTRICAL SPECIFICATIONS

A. DEFINITIONS:

1. "PROVIDE": FURNISH AND INSTALL, COMPLETE AND READY FOR OPERATION.
2. "INSTALL": RECEIVE, MOUNT, AND CONNECT, COMPLETE AND READY FOR OPERATION.
3. "FURNISH": SUPPLY, DELIVER TO JOB SITE, PROTECT AND STORE.

B. WORK INCLUDED: PROVIDE ALL LABOR, TOOLS, MATERIAL, EXCAVATION, BACKFILL, CUTTING, PATCHING, TESTING, ADJUSTING, AND TRADE COORDINATION REQUIRED FOR A COMPLETE AND FULLY OPERATIONAL INSTALLATION, AS DESCRIBED ON THE DRAWINGS OR IN THE SPECIFICATIONS.

C. CODES, RULES, AND REGULATIONS: COMPLY WITH ALL CODES ENFORCED BY THE LOCAL INSPECTION AUTHORITY, THE EDITION OF THE NATIONAL ELECTRICAL CODE BEING ENFORCED FOR THIS PROJECT BY THE LOCAL INSPECTION AUTHORITY, ALL APPLICABLE LAWS AND ORDINANCE, NFPA FIRE CODES, STANDARD BUILDING CODE. GIVE ALL NECESSARY NOTICES, OBTAIN ALL REQUIRED PERMITS, AND PAY ALL INSPECTION AND OTHER FEES REQUIRED BY AUTHORITIES HAVING JURISDICTION OVER THE WORK.

D. MATERIALS: ALL MATERIAL SHALL BE NEW, AND SHALL COMPLY WITH THE INDICATED STANDARDS. ALL MATERIAL SHALL BE U/L LABELED OR U/L LISTED. ALL MATERIAL SHALL BE OF A SUITABLE TYPE AND RATING FOR THE INTENDED USE, AND SHALL BE INSTALLED IN CONFORMANCE WITH THE INSTRUCTIONS AND RECOMMENDATIONS OF THE MANUFACTURER.

E. DRAWINGS

1. THE DRAWINGS ARE SCHEMATIC IN NATURE AND DO NOT SHOW ALL OF THE REQUIRED DETAILS OF THE WORK. ALL MATERIALS CUSTOMARILY CONSIDERED TO BE A PART OF THE ELECTRICAL WORK AND REQUIRED FOR A COMPLETE AND OPERATIONAL INSTALLATION SHALL BE PROVIDED WITHOUT ADDITIONAL COST TO THE OWNER.
2. THE CONTRACTOR SHALL REFER ALSO TO THE ARCHITECTURAL DRAWINGS AND TO THE DRAWINGS OF ALL OTHER TRADES TO COORDINATE THE ELECTRICAL INSTALLATION. WHERE ELECTRICAL EQUIPMENT IS SHOWN ON ARCHITECTURAL DRAWINGS OR DETAILS, THE EQUIPMENT SHALL BE INSTALLED AS SHOWN ON THE ARCHITECTURAL DRAWINGS.
3. EQUIPMENT OF OTHER TRADES IS SHOWN SCHEMATICALLY ON THE ELECTRICAL DRAWINGS. THE CONTRACTOR SHALL EXAMINE THE DRAWINGS OF THE TRADE PROVIDING THE EQUIPMENT BEFORE ROUGHING IN THE CONNECTIONS FOR IT. THE CONTRACTOR SHALL CONNECT THE EQUIPMENT WHERE ACTUALLY INSTALLED, INCLUDING WIRING THROUGH ANY LINE VOLTAGE CONTROLLERS, WITHOUT ANY ADDITIONAL COST TO THE OWNER.
4. PRIOR TO ROUGHING IN CIRCUITS FOR EQUIPMENT FURNISHED BY OTHER TRADES, AND PRIOR TO RELEASING FOR MANUFACTURE PANELBOARDS, STARTERS OR MOTOR CONTROL CENTERS FEEDING SUCH EQUIPMENT, THE CONTRACTOR SHALL COORDINATE THE ELECTRICAL PROVISIONS BEING PLANNED WITH THE TRADE PROVIDING THE EQUIPMENT AND SUBMIT ANY CONFLICTS IN WRITING TO THE ARCHITECT.
5. THE ARCHITECT MAY DIRECT THE RELOCATION OF ANY ELECTRICAL OUTLET, FIXTURE, OR OTHER EQUIPMENT TO A LOCATION WITHIN 10 FEET OF THE LOCATION SHOWN ON THE DRAWINGS AT NO ADDITIONAL COST TO THE OWNER PROVIDED SUCH RELOCATION IS DIRECTED PRIOR TO THE INSTALLATION OF THE OUTLET, FIXTURE OR EQUIPMENT BEING RELOCATED.

D. SUBMITTAL DOCUMENTS: PRODUCT DATA AND SHOP DRAWINGS SHALL BE SUBMITTED IN SIX COPIES TO THE ARCHITECT FOR REVIEW PRIOR TO THE RELEASE OF THE MATERIAL FOR MANUFACTURE. REVIEW OF SUBMITTALS BY THE ARCHITECT WILL BE ONLY FOR GENERAL CONFORMANCE WITH THE DRAWINGS AND SPECIFICATIONS. REVIEW WILL BE MADE ONLY OF INFORMATION CLEARLY AND SPECIFICALLY INDICATED IN THE SUBMITTAL, AND DOES NOT IMPLY THE ACCEPTABILITY OF DETAILS WHICH ARE NOT SO DESCRIBED IN THE SUBMITTAL. REVIEW OF THE SUBMITTAL DOCUMENTS BY THE ARCHITECT DOES NOT RELIEVE THE CONTRACTOR OF THE RESPONSIBILITY TO COMPLY WITH ALL REQUIREMENTS OF THE DRAWINGS AND SPECIFICATIONS. SUBMITTAL IS REQUIRED FOR PANELBOARDS AND LOADCENTERS, LIGHT FIXTURES, WIRING DEVICES, FIRE ALARM DEVICES, AND SURFACE ALUMINUM RACEWAY.

G. AS-BUILT DRAWINGS: AS-BUILT DRAWINGS SHALL BE MAINTAINED AT THE JOBSITE, AND SHALL BE AVAILABLE FOR REVIEW DURING CONSTRUCTION. AS-BUILT DRAWINGS SHALL BE KEPT CURRENT DURING THE COURSE OF CONSTRUCTION OF THE WORK. SUBMIT AS-BUILT DRAWINGS TO THE ARCHITECT AT THE COMPLETION OF THE PROJECT.

H. TESTING: TEST ALL PARTS OF THE WORK TO VERIFY COMPLIANCE WITH THE DRAWINGS AND SPECIFICATIONS. VERIFY TIGHTNESS OF ALL MECHANICAL AND ELECTRICAL CONNECTIONS. VERIFY INTEGRITY OF ALL WIRING SYSTEMS TO ASSURE CONTINUITY, ABSENCE OF UNINTENTIONAL GROUNDS, AND INTEGRITY OF REQUIRED GROUNDS.

I. CHANGE REQUEST (CHANGE ORDER) APPROVAL: CHANGE REQUESTS WILL NOT BE CONSIDERED UNLESS THE CONTRACTOR'S DETAILED LABOR AND MATERIAL ESTIMATE DESCRIBING THE CHANGE IS SUBMITTED TO THE ARCHITECT ALONG WITH THE CHANGE REQUEST, WITH MATERIAL PRICES AND LABOR UNITS ASSIGNED TO EACH LINE ITEM OF THE ESTIMATE. MATERIAL PRICES SHALL BE THE ACTUAL PRICE PAID BY THE CONTRACTOR FOR MATERIAL PURCHASED OR THE ACTUAL PRICE QUOTED TO THE CONTRACTOR BY THE MATERIAL VENDOR PROPOSED BY THE CONTRACTOR.

J. COORDINATION WITH THE WORK OF OTHERS: COORDINATE WITH EACH TRADE FURNISHING EQUIPMENT REQUIRING ELECTRICAL SERVICE TO INSURE THAT THE CHARACTERISTICS SHOWN ON THE DRAWINGS FOR THE CIRCUIT SERVING THE EQUIPMENT ARE COMPATIBLE WITH THE REQUIREMENTS OF THE EQUIPMENT BEING FURNISHED. CIRCUIT BREAKERS, FUSES, DISCONNECT SWITCHES AND ASSOCIATED BRANCH CIRCUITS SHOWN ON THE DRAWINGS TO FEED HVAC EQUIPMENT, KITCHEN EQUIPMENT, ELEVATOR MOTORS, AND OTHER EQUIPMENT HAVE BEEN SELECTED BASED UPON THE CHARACTERISTICS OF EQUIPMENT BY ONE MANUFACTURER AND MAY NOT BE CORRECT FOR THE EQUIPMENT BEING PROVIDED BY THE CONTRACTOR. THE CONTRACTOR SHALL DETERMINE THE OPERATING CHARACTERISTICS OF THE EQUIPMENT ACTUALLY BEING PROVIDED AND SHALL PROVIDE AT NO ADDITIONAL COST TO THE OWNER CIRCUIT BREAKERS, FUSES, DISCONNECT SWITCHES AND BRANCH CIRCUITS AS REQUIRED BY THAT EQUIPMENT.

K. EXISTING WORK: THE EXISTING ELECTRICAL INSTALLATION SHALL REMAIN AS-IS AND IN OPERATION EXCEPT WHERE OTHERWISE REQUIRED. GIVE WRITTEN NOTICE OF ANY UNFORESEEN EXISTING CONDITIONS WHICH MAY AFFECT THE WORK. WORK INVOLVING EXISTING SYSTEMS OR EXISTING SPACES SHALL BE ACCOMPLISHED WITH MINIMUM INCONVENIENCE TO THE OWNER, AND SHALL BE DONE IN A MANNER AND TIME APPROVED BY THE OWNER. ANY INTERRUPTIONS SHALL BE DURING TIMES DESIGNATED BY THE OWNER.

L. DEMOLITION: IN THE AREA SHOWN ON THE ARCHITECTURAL DRAWINGS TO BE DEMOLISHED REMOVE ALL EXISTING CONDUITS, CONDUCTORS, BOXES, FIXTURES, SERVICE ENTRANCE CONDUCTORS, DISTRIBUTION EQUIPMENT, AND ALL OTHER ELECTRICAL EQUIPMENT NOT SHOWN TO REMAIN. UNLESS OTHERWISE INDICATED, MATERIAL BEING REMOVED INCLUDING WIRE, CONDUIT, AND HANGING MATERIALS BEING REMOVED SHALL BECOME THE PROPERTY OF THE CONTRACTOR AND SHALL BE REMOVED FROM THE PREMISES. EQUIPMENT NOTED TO REMAIN THE PROPERTY OF THE OWNER SHALL BE STORED ON SITE AS DIRECTED BY THE ARCHITECT. COORDINATE WITH OTHER TRADES AND DISCONNECT MOTORS, HEATERS, OR OTHER EQUIPMENT AS REQUIRED FOR THE DEMOLITION OF OTHER TRADES WORK. CUT OFF ALL IN FLOOR CONDUITS, GRIND SMOOTH WITH FLOOR AND PREPARE FOR PATCHING BY OTHERS. REMOVE CONDUCTORS AND DEVICES FROM WALL AND CEILING OUTLETS AND PREPARE OUTLET FOR PATCHING BY OTHERS. CONTRACTOR SHALL DENOTE ALL DEMOLISHED CIRCUITS ON EXISTING PANEL DIRECTORIES AND NOTE ALL SPARE BREAKERS.

M. BASIC MATERIALS AND METHODS:

1. ALL WORK SHALL BE SUPPORTED FROM STRUCTURAL ELEMENTS OF THE BUILDING, EXCEPT CEILING MOUNTED EQUIPMENT SUCH AS LIGHT FIXTURES, DETECTORS, REMOTE LAMPS, ETC. CEILING MOUNTED EQUIPMENT SHALL BE SUPPORTED FROM CEILING STRUCTURAL MEMBERS, INDEPENDENT OF CEILING TILES. SIZE AND SPACING OF SUPPORTS SHALL BE DETERMINED BY THE LOAD TO BE SUPPORTED SUCH THAT THE WORKING LOAD OF SUPPORTS WILL NOT EXCEED A SAFETY FACTOR OF 4:1. PLASTIC ANCHORS ARE NOT ACCEPTABLE. ELECTRICAL WORK SHALL NOT BE SUPPORTED FROM PIPING, DUCTS, OR WORK OF OTHER TRADES.
2. PROVIDE ENGRAVED PLASTIC NAMEPLATES FOR ALL SWITCHBOARDS, PANELBOARDS, MOTOR CONTROL CENTERS, STARTERS, DISCONNECTS, PRIMARY SELECTOR SWITCHES, AND TRANSFORMERS. INDICATE EQUIPMENT NAME, CIRCUIT SOURCE AND NUMBER, CIRCUIT SIZE, AMPERE RATING, VOLTAGE AND PHASE. NAMEPLATES SHALL BE BLACK MICARTA WITH 0.25" WHITE LETTERS.
3. ALL PENETRATIONS OF FIRE RATED WALLS, SLABS, PARTITIONS, AND CEILINGS SHALL BE FIREPROOFED WITH A U.L. LISTED SYSTEM THAT WILL MAINTAIN THE ORIGINAL FIRE RATING OF THE PENETRATED STRUCTURE. ALL FIREPROOFING MATERIALS APPLIED AT ANY ONE PENETRATION SHALL BE THE PRODUCT OF ONE MANUFACTURER AND SHALL BE APPLIED AS DESCRIBED BY THE U.L. FIREPROOFING SYSTEM BEING CONSTRUCTED. FIREPROOFING OF SLEEVES, CABLE TRAYS, TROUGHS, AND NIPPLES TO BE USED FOR LOW VOLTAGE CABLES SHALL BE INDEFINITELY NON-HARDENING AND REMOVABLE WITH COMMON HAND TOOLS.
4. BACKBOARDS SHALL BE 8 FT. HIGH BY LENGTH SHOWN ON THE DRAWINGS AND SHALL BE U/L LABELED FIRE TREATED PLYWOOD.
5. PROVIDE ALL POWER WIRING AND CONNECTIONS FOR ALL ELECTRICALLY OPERATED EQUIPMENT. POWER WIRING INCLUDES WIRING THROUGH ANY LINE VOLTAGE CONTROL DEVICES, SUCH AS THERMOSTATS AND MANUAL STARTERS. INSTALL ALL STARTERS AND CONTACTORS EXCEPT THOSE FURNISHED AS AN INTEGRAL PART OF THE EQUIPMENT.
6. CONNECTIONS TO MOTORS, TRANSFORMERS, AND OTHER VIBRATING EQUIPMENT NOT INSTALLED IN A PLENUM SPACE SHALL BE MADE WITH A SHORT LENGTH OF LIQUIDTIGHT FLEXIBLE CONDUIT, MINIMUM 18", INSTALLED IN A MANNER TO PERMIT MOVEMENT OF EQUIPMENT.
7. PERFORM ALL EXCAVATING, BACKFILLING, CUTTING AND REPAIRING REQUIRED FOR INSTALLATION OF ELECTRICAL WORK.
8. CONTRACTOR SHALL X-RAY FLOOR SLABS PRIOR TO ALL CORE DRILLINGS.

N. CONDUIT: FEEDERS AND BRANCH CIRCUIT HOME RUNS SHALL BE CONSTRUCTED OF EMT WITH ALL STEEL SET-SCREW FITTINGS. CONNECTORS SHALL BE INSULATED THROAT TYPE. PROVIDE METALLIC BUSHINGS WITH PLASTIC INSERTS FOR 3" OR LARGER. CONDUITS FEEDING OR CONNECTING TO EQUIPMENT PROVIDED BY OTHER TRADES SHALL NOT BE INSTALLED UNTIL SUCH EQUIPMENT IS INSTALLED OR UNTIL SPECIFIC ROUGH-IN INSTRUCTIONS ARE PROVIDED BY THE TRADE PROVIDING THE EQUIPMENT. UNLESS OTHERWISE INDICATED, CONDUITS SHALL BE CONCEALED. RACEWAYS INSTALLED IN OR UNDER SLABS, ON GRADE, OR AS EXTERIOR DUCT BANKS SHALL BE PVC COATED RMC. RUN EXPOSED CONDUITS PARALLEL OR PERPENDICULAR TO STRUCTURAL ELEMENTS. TWO OR MORE RACEWAYS RUN TOGETHER SHALL BE INSTALLED ON GANG TRAPEZE TYPE HANGERS. SUCH RACEWAYS ASSEMBLIES SHALL BE RUN PARALLEL OR PERPENDICULAR TO STRUCTURAL ELEMENTS. CONDUITS EMBEDDED IN SLABS SHALL HAVE A MINIMUM OF 1" COVER OF CONCRETE ON ALL SIDES. OUTSIDE DIAMETER OF CONDUIT SHALL NOT EXCEED 1/3 OF THE SLAB THICKNESS, AND SHALL NOT BE LARGER THAN 1 1/4". PROVIDE 0.25" NYLON PULL TAPE IN ALL EMPTY CONDUITS. BRANCH CIRCUITS MAY UTILIZE TYPE MC ARMORED CABLE ASSEMBLY WITH COPPER CONDUCTORS AND FULL SIZE EQUIPMENT GROUNDING CONDUCTORS FOR INDIVIDUAL DROPS TO DEVICES. TYPE MC CABLE SHALL BE SUPPORTED A 48" INTERVALS AND SHALL NOT LAY ON THE CEILING GRID OR INTERFERE WITH THE REMOVAL OF CEILING SIZE EQUIPMENT GROUNDING CONDUCTORS.

O. CONDUCTORS: ALL BUILDING WIRE SHALL BE 600 VOLT RATED THHN OR THWN COPPER, STRANDED FOR SIZES $8AWG AND LARGER, SOLID FOR SIZES 10 AND SMALLER UNLESS APPLIED FOR CONTROL. ALL BUILDING WIRE AND SPECIAL CABLES FOR SYSTEMS SHALL BE INSTALLED IN A RACEWAY. ALL WIRE AND CABLE SHALL BE DELIVERED TO THE JOBSITE IN ORIGINAL UNBROKEN PACKAGES, CARTONS OR REELS, WITH THE MANUFACTURERS NAME, UL LABEL, AND CHARACTERISTICS OF THE PRODUCT PLAINLY VISIBLE. ALL WIRE AND CABLE SHALL BE MANUFACTURED IN THE UNITED STATES OF AMERICA. WIRES SHALL BE COLOR CODED AS FOLLOWS (A,B,C,N,G): 120/208VOLT-BLACK, RED, BLUE, WHITE, GREEN; 480/277 - BROWN, ORANGE, YELLOW, GRAY. GREEN. SPLICES SHALL BE COMPRESSION TYPE. CONTROL CONDUCTORS SHALL BE TERMINATED WITH INSULATED CONNECTORS, T&B STAKON. 120 VOLT CIRCUITS WITH HOMERUN LENGTH OVER 100 FEET AND 277 VOLT CIRCUITS WITH A HOMERUN LENGTH OVER 200 FEET SHALL HAVE #10 MINIMUM HOMERUN CONDUCTORS. ALL THREE PHASE BRANCH CIRCUITS WITH A COMMON NEUTRAL SHALL HAVE #10 MINIMUM NEUTRAL.

P. BOXES: OUTLET BOXES SHALL BE SHEET STEEL, MINIMUM 4" SQUARE, MINIMUM 1.5" DEEP, WITH PLASTER RING IN PLASTER OR BRICK CONSTRUCTION. OUTLETS BOXES IN POURED CONCRETE SHALL BE CONCRETE RINGS. MASONRY BOXES SHALL BE USED IN MASONRY OR TILE CONSTRUCTION. OUTLET BOXES FOR SURFACE ALUMINUM RACEWAY SHALL BE 4-11/16 WITH PLASTER RINGS ORIENTED HORIZONTALLY. BOXES SHALL BE SECURELY ANCHORED IN PLACE, AND SHALL BE SUPPORTED INDEPENDENT OF THE RACEWAY SYSTEM. PULL BOXES SHALL BE GALVANIZED SHEET STEEL, MINIMUM 12 GAUGE, WITH SCREW COVERS, AND WELDED CONSTRUCTION. WELDS SHALL BE COLD GALVANIZED. USING PERMANENT WATER PROOF WIDE BLACK MARKER, CLEARLY LABEL COVER OF ALL BRANCH CIRCUIT JUNCTION AND PULL BOXES WITH PANEL AND CIRCUIT NUMBER OF CIRCUITS CONTAINED IN OR PASSING THROUGH THE BOX. BRANCH CIRCUIT AND FEEDER JUNCTION AND PULL BOXES USED WITH EMERGENCY FEEDERS AND CIRCUITS SHALL BE PAINTED RED. PROVIDE ENGRAVED LAMINATED PLASTIC LABEL ON COVER OF EACH FEEDER PULL OR JUNCTION BOX INDICATING FEEDER DESIGNATION, SOURCE, LOAD, AND VOLTAGE.

Q. WIRING DEVICES: SWITCHES FOR LIGHTING CIRCUITS SHALL BE 120/277 VOLT, 20 AMP, A.C. ONLY, QUIET TYPE, WITH GROUND BONDING SCREW, SPECIFICATION GRADE. MOMENTARY CONTACT SWITCHES SHALL BE SINGLE POLL DOUBLE THROW, CENTER OFF GE #5935 OR EQUAL. DUPLEX RECEPTACLES SHALL BE 15 AMP HUBBELL 5262 OR EQUAL. DEDICATED DUPLEX RECEPTACLES SHALL BE 20AMP HUBBELL IG5362 OR EQUAL. SPECIAL RECEPTACLES SHALL BE OF SIMILAR CONSTRUCTION. FACE PLATES SHALL BE SMOOTH NYLON OR THERMOSET PLASTIC. ADJACENT OUTLETS SHALL BE INSTALLED IN MULTI-GANG BOXES WITH A SINGLE MULTI-GANG FACE PLATE. RECEPTACLES CONNECTED TO AN EMERGENCY CIRCUIT SHALL BE RED. COORDINATE COLOR OF DEVICES AND FACEPLATE WITH ARCHITECT.

R. GROUNDING: ALL FEEDERS AND BRANCH CIRCUITS SHALL BE PROVIDED WITH INSULATED GREEN EQUIPMENT GROUNDING CONDUCTOR.

S. LIGHTING: SPARE FLUORESCENT LAMPS SHALL MATCH BUILDING STANDARD UNLESS NOTED OTHERWISE. INCANDESCENT LAMPS SHALL BE 130VOLT. NEW BALLASTS SHALL BE SOILD STATE ELECTRONIC. EXIT FIXTURES SHALL MATCH BUILDING STANDARD. FIXTURE LOCATIONS SHALL BE AS SHOWN ON THE REFLECTED CEILING PLAN. PROVIDE LAY-IN FIXTURES WITH TWO REMOVABLE CLIPS ATTACHING FIXTURE TO CEILING GRID. FLANGED FIXTURES SHOWN TO BE INSTALLED IN CONTINUOUS ROWS SHALL NOT HAVE INTERMEDIATE FLANGES. ALL PENDANT FIXTURES SHALL BE MOUNTED TO STRUCTURE. SEISMIC SUPPORT WIRES AND/OR COMPRESSION STRUTS FOR LAY-IN FIXTURES SHALL BE SUBJECT TO LOCAL AHJ LATEST REQUIREMENTS.

T. FIRE ALARM DEVICES: NEW FIRE ALARM DEVICES SHALL BE COMPATIBLE WITH EXISTING BUILDING ADDRESSABLE FIRE ALARM SYSTEM. INSTALL NEW DEVICES AND CONNECT TO NEAREST SIGNALING OR NOTIFICATION DEVICE CIRCUIT WITHIN THE AREA. CONTRACTOR SHALL VERIFY CIRCUIT HAS CAPACITY FOR ADDED LOAD. SYSTEM SHALL BE CERTIFIED BY FIRE ALARM VENDOR AFTER COMPLETION OF WORK.

U. PANELBOARDS: DEAD FRONT PANEL CONSTRUCTION WITH SEPARATELY MOUNTED INTERIOR TRIM. MAIN AND BRANCH DEVICES SHALL BE BOLT-ON. MULTI-POLE BREAKERS SHALL BE COMMON TRIP. WIDTH SHALL NOT EXCEED 22" FOR PANELBOARD AND ENCLOSURE SHALL MATCH BUILDING STANDARD. PROVIDE GROUND BUS IN PANELBOARD AND PROVIDE DEVICE MOUNTING HARDWARE WHERE A SPACE IS SCHEDULED. PANEL AND OCPD SHORT CIRCUIT RATINGS SHALL BE AT LEAST 10% GREATER THAN AVAILABLE SHORT CIRCUIT CURRENT AT PANELBOARD.

V. DRY-TYPE TRANSFORMERS: TRANSFORMERS SHALL BE DRY-TYPE, ENCLOSED, SELF-COOLED, VENTILATED TYPE, DEAD-FRONT DRIP PROOF. PRIMARY AND SECONDARY TAPS SHALL BE ACCESSIBLE FROM THE FRONT. TRANSFORMERS SHALL MEET OR EXCEED BUILDING STANDARD TRANSFORMERS SPECIFICATIONS. PROVIDE AN EQUIPMENT GROUNDING CONDUCTOR IN THE PRIMARY FEED TO THE TRANSFORMER. SUPPLEMENTAL GROUND TO NEAREST ACCESSIBLE PRIMARY STRUCTURAL MEMBER OR EQUIPMENT ROOM GROUND BUS BAR. SIZE PER NEC AND RUN IN CONDUIT WITH BOND BUSHING AT EACH END. NEUTRAL AND GROUNDING CONDUCTOR SHALL BE BONDED TO ENCLOSURE.

YOUR PIE

YOUR PIE
7309 KINGS MOUNTAIN PLACE.
SUITE 640
VESTAVIA, AL 35242

MEP CONTACT:JUSTIN R. HARDY, PE
5014 KINGSBRIDGE PASS
POWDER SPRINGS, GA
Phone: (678) 234-8156

ARCHITECT/ENGINEER STAMP

| REV. NO. | DATE | DESCRIPTION |
|---|---|---|
| 1 | 8/16/16 | PLANNING ENGINEERING AND PERMITS |

PROJECT NO: 2015-1077
DRAWN BY: CC
CHECKED BY: TT
ISSUE DATE: 7-13-16

NOTES & LEGEND

E0.1

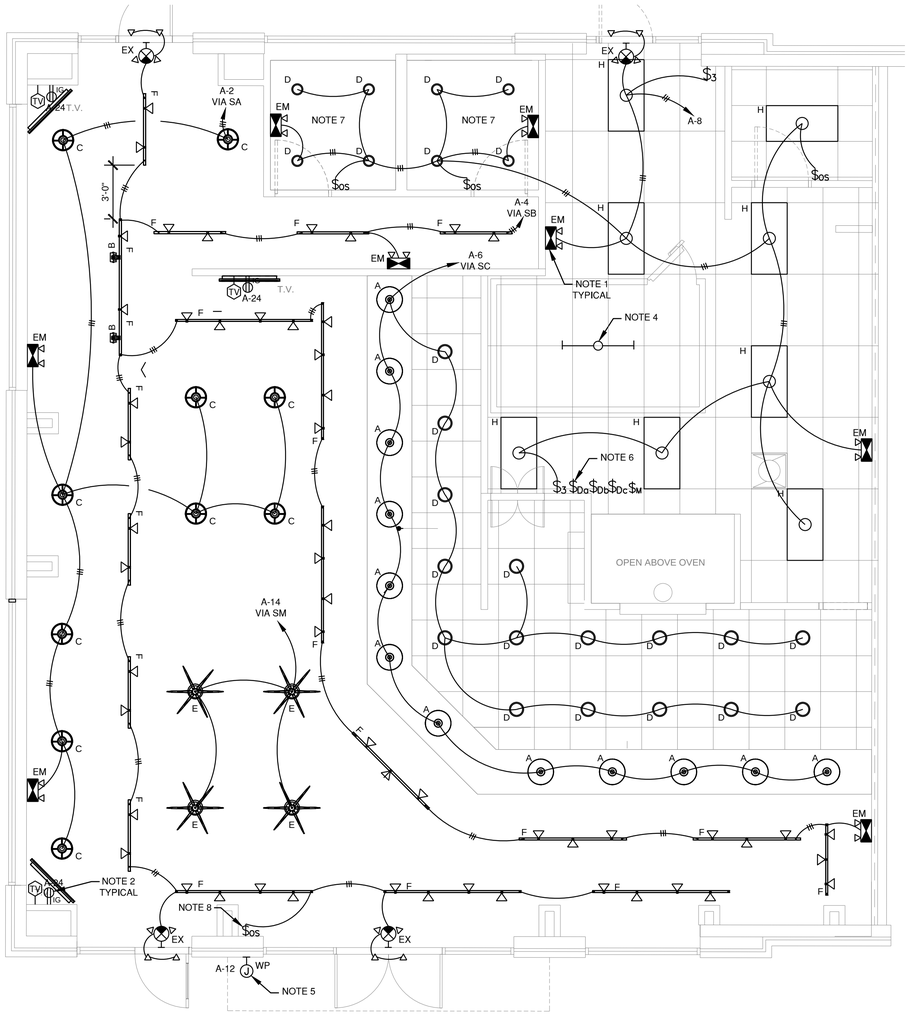
EX
A-2
VIA SA
A-24 T.V.
NOTE 7
NOTE 7
EM
$os
A-4
VIA SB
A-6
VIA SC
NOTE 1
TYPICAL
NOTE 4
NOTE 6
$3 $Da $Db $Dc $Dc $Dc

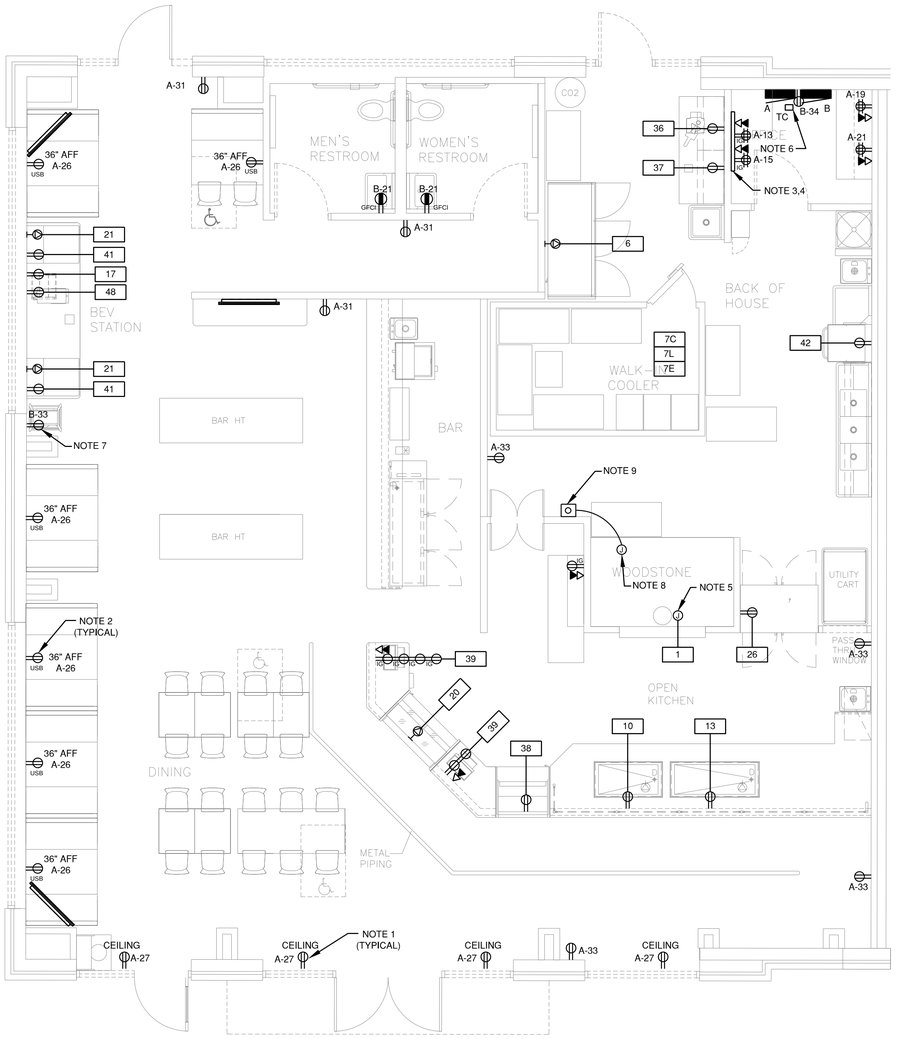


# POWER FLOOR PLAN

1/4" = 1'-0"

## GFCI NOTE:

GFCI RECEPTACLES SHALL BE INSTALLED IN ACCORDANCE WITH 2011 NEC ARTICLE 210.8 AND BE READILY ACCESSIBLE. FOR EQUIPMENT THAT WOULD HAVE TO BE MOVED TO RESET THE RECEPTACLE, A GFCI BREAKER SHALL BE UTILIZED IN IT'S PLACE. COORDINATE WITH THE OWNER ON THE EQUIPMENT AS TO WHICH WILL REQUIRE MOVED DURING A GFCI TRIP.

## POWER AND SYSTEMS NOTES:

1. SHOW WINDOW RECEPTACLES AT 18" ABOVE WINDOWS PAINT EXPOSED CONDUIT AND JUNCTION BOXES TO MATCH WALL FINISH
2. COORDINATE ALL RECEPTACLE HEIGHTS WITH ARCHITECTURAL DRAWINGS AND KITCHEN EQUIPMENT DRAWINGS. RECEPTACLES SHALL BE BLACK WITH BLACK COVER PLATES UNLESS OTHERWISE DIRECTED BY OWNER. RECEPTACLES LABELED USB SHALL HAVE A DUAL USB PORTS INSTALLED LEVITON T5832 OR APPROVED EQUAL.
3. ALARM SYSTEM CONTROL FINAL CONNECTION BY ALARM CONTRACTOR. STACK ALARM PANEL ABOVE TELEPHONE PANEL. COORDINATE OUTLET MOUNTING HEIGHT. FIRE ALARM CONTRACTOR TO COORDINATE ALARM REQUIREMENTS AND INTERCONNECTIONS WITH LL FA PANEL INCLUDING SMOKE DETECTORS AND AND OTHER DETECTIONS DEVICES.
4. PROVIDE AND INSTALL A 3' X 4' X 3/4" PLYWOOD BACKBOARD PAINTED WITH (2) COATS OF FIRE RETARDANT GRAY PAINT TO MEET REQUIREMENTS OF TELEPHONE SERVICE PROVIDER, WITH A #6 AWG COPPER GROUNDING CONDUCTOR IN ¾" PVC CONDUIT FROM BACKBOARD TO SERVICE ENTRANCE GROUND. COORDINATE EXACT LOCATION WITH OWNER. PROVIDE 2" CONDUIT WITH PULL WIRE FROM BACKBOARD TO TELEPHONE SERVICE PROVIDER'S POINT OF SERVICE.
5. CONNECTION FOR PIZZA OVEN COORDINATE FINAL LOCATION AND CONTROLS PRIOR TO ROUGH-IN.
6. PROVIDE ASTRONOMICAL TIME CLOCK TO CONTROL EXTERIOR SIGNS.
7. POWER FOR WATER BOOSTER IF BOOSTER IS INSTALLED.
8. PROVIDE JUNCTION BOX FOR GAS SOLENOID MAKE FINAL CONNECTIONS AS REQUIRED. PROVIDE CONNECTION TO SHUNT TRIP BREAKERS AS NOTED IN THE PANEL SCHEDULES AND KITCHEN EQUIPMENT SCHEDULE.
9. PROVIDE JUNCTION BOX FOR GAS SOLENOID PUSH BUTTON EMERGENCY STOP. MAKE CONNECTIONS AS REQUIRED AND COORDINATE MOUNTING LOCATION WITH OWNER.
10. EC SHOULD RUN 1/2" CONDUIT AND #18 AWG STRANDED SPEAKER WIRE FOR SPEAKERS TO THIS LOCATION. SEE ARCHITECTURAL FOR SPEAKERS LOCATION.
11. EC SHALL RUN AND TERMINATE PHONE / CABLE/DATA AS REQUIRED. SEE NETWORK DETAIL ON THIS SHEET.

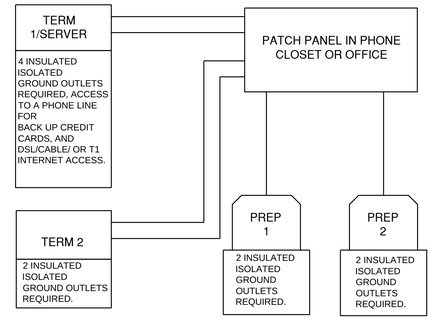


1. ALL RUNS INDICATED SHALL BE CAT5E B-SIDE FEMALE PUNCH-DOWNS.
2. PROVIDE 6 RUNS. TWO FROM EACH TERMININAL AND ONE FROM THE REMOTE PREP PRINTER.
3. PROVIDE A BACK-UP PHONE LINE AVAILABLE AT TERM1.
4. PROVIDE POS EQUIPMENT RECEPTACLES WITH INSULATED, ISOLATED GROUND.
5. ALL CAT 5 & ELECTRICAL SHALL BE BETWEEN 3FT -5 FT FROM EQUIPMENT SERVED.

## PHONE/DATA WIRING DETAIL

## KITCHEN EQUIPMENT GENERAL ELECTRICAL NOTES :

1. THIS ELECTRICAL PLAN IS INTENDED TO SHOW ROUGH-IN LOCATIONS AND HEIGHTS, CONNECTION TYPES, POSITIONS, FIXTURE TYPES, AND LOAD REQUIREMENTS. DIMENSIONS SHOWN ARE FROM FINISHED FLOORS (NOT RAISED CURBS OR SUB-FLOOR SLABS) TO THE CENTERLINE OF THE OUTLET SET HORIZONTALLY OR THE UTILITY. VERIFY FINISHED WALL PARTITION LOCATIONS WITH SPECIAL CONDITIONS PLAN/ARCHITECTURAL FLOOR PLAN.
2. KITCHEN EQUIPMENT CONTRACTOR, PRIOR TO EQUIPMENT INSTALLATION, SHALL CHECK ALL UTILITY ROUGH-IN LOCATIONS, COORDINATE FIELD CONDITIONS, AND CALL TO THE ATTENTION OF THE GENERAL CONTRACTOR ANY AND ALL DISCREPANCIES BETWEEN THE FOOD SERVICE ROUGH-IN PLANS, THE EQUIPMENT AS SPECIFIED, AND THE ROUGH-INS AS THEY OCCUR IN THE FIELD.
3. FINAL CONNECTIONS TO ALL EQUIPMENT SHALL BE BY THE ELECTRICAL CONTRACTOR, INCLUDING ALL REQUIRED MATERIALS SUCH AS DISCONNECTS, BOXES, OUTLETS (EXCEPT AS FURNISHED AS PART OF THE EQUIPMENT), RIGID CONDUIT, FLEXIBLE CONDUIT, WIRING, ETC.
4. THE ELECTRICAL CONTRACTOR SHALL FURNISH AND INSTALL THE FOLLOWING:
   A. ALL JUNCTION BOXES, ELECTRICAL OUTLETS, STAINLESS STEEL COVER PLATES, SWITCHES, ETC. NOT BUILT INTO FIXTURES OR EQUIPMENT. ALL OUTLETS, JUNCTION BOXES, COVER PLATES, ETC. IN DISH ROOMS, PREP ROOMS/AREAS, OR AS INDICATED ON SCHEDULE MUST BE MOISTURE PROOF.
   B. ALL PLUGS AND CORDS AS REQUIRED. ALL CORDS SHALL BE NEMA RATED AND U.L. APPROVED FOR MANUFACTURED AND FABRICATED EQUIPMENT.
   C. SHUNT-TRIP CIRCUIT BREAKERS OR DISCONNECTS FOR FIRE SUPPRESSION SYSTEM SHUT-OFF OF FOOD SERVICE EQUIPMENT BENEATH HOODS/VENTILATORS AS REQUIRED BY N.F.P A - 96 AND LOCAL/STATE/NATIONAL CODES.
   D. DISCONNECTS OR OTHER DEVICES AS MAY BE REQUIRED BY LOCAL/STATE/NATIONAL CODES.
5. THE ELECTRICAL CONTRACTOR SHALL PROVIDE CIRCUITS AND WIRING, INSTALL ELECTRICAL COMPONENTS (PROVIDED BY K.E.C.), AND INTER-WIRE BETWEEN THE FOLLOWING:
   A. REMOTE REFRIGERATION SYSTEMS TO EVAPORATOR COILS.
   B. WALK-IN COOLER/FREEZER LIGHTS (RUN CONDUIT ABOVE COMPARTMENT CEILING HUNG PANELS).
   C. WALK-IN COOLER/FREEZER ALARM SYSTEMS (WHEN SPECIFIED).
   D. CONTROL PANELS TO EXHAUST/SUPPLY FANS PER MANUFACTURER'S INSTRUCTIONS AND LOCAL/STATE/NATIONAL CODES.
   E. CONDUIT AND WIRING BETWEEN HOODS/VENTILATORS, CONTROL PANELS, REMOTE FIRE SWITCH, FIRE SUPPRESSION SYSTEM, FUEL SHUT - OFF DEVICES, AND EXHAUST/SUPPLY FANS.
   F. CONDUIT AND WIRING BETWEEN WALL SWITCH AND LIGHT FIXTURES INSTALLED IN VENTILATORS BY ELECTRICAL TRADE.
   G. CONDUIT AND WIRING BETWEEN FUEL LINE SOLENOID SHUT- OFF VALVES, SHUNT- TRIP BREAKERS, CONTACTORS AND FIRE SUPPRESSION SYSTEM.
   H. FOOD SERVICE EQUIPMENT CONTRACTOR TO PROVIDE HEATER TAPE FOR FREEZER DRAIN LINE. ELECTRICAL CONTRACTOR TO MAKE FINAL SERVICE CONNECTION.
6. ELECTRICAL CONTRACTOR TO PROVIDE CIRCUITS ON ROOF FOR EXHAUST/SUPPLY FANS. VERIFY UTILITIES REQUIRED.
7. PROVIDE COMPUTER GRADE, CLEAN GROUND SERVICE FOR ELECTRONIC CASH REGISTERS. PROVIDE EMPTY 3/4" CONDUIT WITH PULL WIRE BETWEEN CASH REGISTER LOCATIONS TO ALLOW UNITS TO BE TIED TOGETHER. REFER TO ARCHITECTURAL PLANS FOR CLOCKS, INTERCOM, TIME CLOCKS, POINT OF SALE (POS), CASH MACHINERY AND OTHER ITEMS LOCATED IN FOOD SERVICE AREA BUT NOT INCLUDED IN THE FOOD SERVICE EQUIPMENT CONTRACT. PRIOR TO INSTALLATION, VERIFY CASH SYSTEMS POWER REQUIREMENTS WITH OWNER.
8. ELECTRICAL COMPONENTS MUST NOT INTERFERE WITH THE OPERATION OF THE ITEMS OF FOODSERVICE EQUIPMENT.

## KITCHEN EQUIPMENT SCHEDULE

| TAG | DESCRIPTION | VOLTAGE | PHASE | HP | KW | KW / PHASE | FLA | BREAKER AMPACITY | SHUNT TRIP | PANEL | FEEDER | DISCONNECT | COMMENTS | MOUNTING HEIGHT |
|---|---|---|---|---|---|---|---|---|---|---|---|---|---|---|
| 1 | PIZZA OVEN | 120 | 1 | | | 0.48 | 4.0 | 20 | YES | B-2 | 2 # 12 ,1# 12 G- 1/2 "C. | DIRECT CONNECTION | CONNECT PER MANUFACTURER INSTRUCTIONS | VIF |
| 6 | REACH-IN FREEZER | 208 | 1 | | | 0.87 | 8.4 | 20 | NO | B-1,3 | 2 # 12 ,1# 12 G- 1/2 "C. | DIRECT CONNECTION | REQUIRES 4-WIRE HARD-WIRED CIRCUIT | 18" AFF |
| 7L | WALK-IN COOLER LIGHTS | 120 | 1 | | | 0.36 | 3.0 | 20 | NO | B-8 | 2 # 12 ,1# 12 G- 1/2 "C. | DIRECT CONNECTION | CONNECT PER MANUFACTURER INSTRUCTIONS | AT UNIT |
| 7E | WALK-IN COOLER EVAPORATOR | 120 | 1 | | | 0.22 | 1.8 | 20 | NO | B-10 | 2 # 12 ,1# 12 G- 1/2 "C. | DIRECT CONNECTION | CONNECT PER MANUFACTURER INSTRUCTIONS | AT UNIT |
| 7C | WALK-IN COOLER CONDENSER | 208 | 1 | | 0.216 | 0.87 | 8.4 | 20 | NO | B-5,7 | 2 # 12 ,1# 12 G- 1/2 "C. | DIRECT CONNECTION | PROVIDE NEMA 3R FUSED DISCONNECT SWITCH | AT UNIT |
| 10 | DROP-IN COLD PAN | 120 | 1 | 0.25 | | 0.62 | 5.2 | 20 | NO | B-12 | 2 # 12 ,1# 12 G- 1/2 "C. | NEMA 5-20R, GFCI | CORD AND PLUG PROVIDED | 18" AFF |
| 12 | BOTTLE COOLER | 120 | 1 | 0.25 | | 0.42 | 3.5 | 20 | NO | B-25 | 2 # 12 ,1# 12 G- 1/2 "C. | NEMA 5-20R, GFCI | CORD AND PLUG PROVIDED | 18" AFF |
| 13 | DROP-IN COLD PAN | 120 | 1 | 0.50 | | 0.62 | 5.2 | 20 | NO | B-16 | 2 # 12 ,1# 12 G- 1/2 "C. | NEMA 5-20R, GFCI | CORD AND PLUG PROVIDED | 18" AFF |
| 17 | BAG IN BOX | 120 | 1 | | | 0.76 | 6.3 | 20 | NO | B-18 | 2 # 12 ,1# 12 G- 1/2 "C. | NEMA 5-20R, GFCI | CORD AND PLUG PROVIDED | 18" AFF |
| 20 | GELATO CASE | 208 | 1 | 0.75 | | 0.30 | 2.9 | 15 | NO | B-9,11 | 2 # 12 ,1# 12 G- 1/2 "C. | DIRECT CONNECTION | CONNECT PER MANUFACTURER INSTRUCTIONS | 72" AFF |
| 21 (2) | ICE MAKER | 208 | 1 | | 0.37 | 0.75 | 7.2 | 20 | NO | B-13,15/17,19 | 2 # 12 ,1# 12 G- 1/2 "C. | DIRECT CONNECTION | CONNECT PER MANUFACTURER INSTRUCTIONS | 18" AFF |
| 26 | PASS THRU REFRIGERATOR | 120 | 1 | 0.33 | | 0.72 | 6.0 | 20 | NO | B-22 | 2 # 12 ,1# 12 G- 1/2 "C. | NEMA 5-20R, GFCI | CORD AND PLUG PROVIDED | 18" AFF |
| 36 | SLICER | 120 | 1 | 0.25 | | 0.30 | 2.5 | 20 | NO | B-24 | 2 # 12 ,1# 12 G- 1/2 "C. | NEMA 5-20R, GFCI | CORD AND PLUG PROVIDED | 44" AFF |
| 37 | HAND MIXER | 120 | 1 | 0.50 | 3.3 | 0.36 | 3.0 | 20 | NO | B-26 | 2 # 10 ,1# 10 G- 1/2 "C. | NEMA 5-20R, GFCI | CORD AND PLUG PROVIDED | 44"AFF |
| 38 | GRAB-IN-GO | 120 | 1 | 0.33 | | 1.92 | 16.0 | 20 | NO | B-28 | 2 # 12 ,1# 12 G- 1/2 "C. | NEMA 5-20R, GFCI | CORD AND PLUG PROVIDED | 18" AFF |
| 39 (2) | POS | 120 | 1 | | 0.72 | 0.72 | | 20 | NO | A-20/22 | 2 # 12 ,1# 12 G- 1/2 "C. | NEMA 5-20R, GFCI | CORD AND PLUG PROVIDED | 18" AFF |
| 41 (2) | COKE DISPENCER | 120 | 1 | | | 0.36 | | 20 | NO | B-6/14 | 2 # 12 ,1# 12 G- 1/2 "C. | NEMA 5-20R, GFCI | CORD AND PLUG PROVIDED | 18" AFF |
| 42 | DISH MACHINE | 120 | 1 | 0.30 | | 0.18 | 3.0 | 20 | NO | B-32 | 2 # 12 ,1# 12 G- 1/2 "C. | DIRECT CONNECTION | CONNECT PER MANUFACTURER INSTRUCTIONS | 66"AFF |
| 48 | TEA BREWER | 120 | 1 | | | 1.68 | 14.0 | 20 | NO | B-20 | 2 # 12 ,1# 12 G- 1/2 "C. | NEMA 5-20R, GFCI | CORD AND PLUG PROVIDED | 18" AFF |

YOUR PIE

YOUR PIE
7309 KINGS MOUNTAIN PLACE.
SUITE 640
VESTAVIA, AL 35242

MEP CONTACT:JUSTIN R. HARDY, PE
5014 KINGSBRIDGE PASS
POWDER SPRINGS, GA
Phone: (678) 234-8156

ARCHITECT/ENGINEER STAMP

| REV. NO. | DATE | DESCRIPTION |
|---|---|---|
| 1 | 8/16/16 | PLAN REVIEW REVISIONS |

PROJECT NO: 2015-1077
DRAWN BY: CC
CHECKED BY: TT
ISSUE DATE: 7-13-16

POWER FLOOR PLAN

E2.0

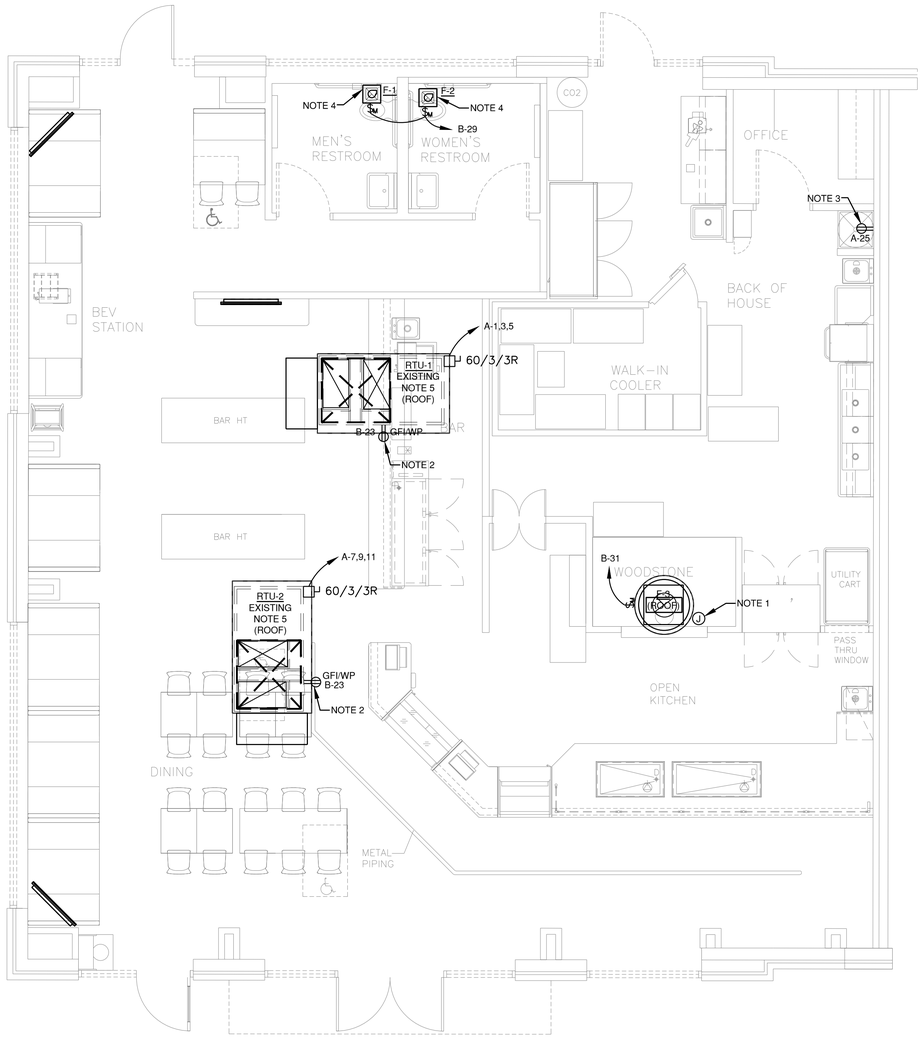


## MECHANICAL FLOOR PLAN

1/4" = 1'-0"

## MECHANICAL NOTES:

1. PROVIDE JUNCTION BOX AND CONDUIT THROUGH SEALED OPENING FOR CONTROL WIRING/POWER WIRING TO MECHANICAL UNITS ON THE ROOF. COORDINATE EXACT EQUIPMENT LOCATIONS WITH MECHANICAL DRAWINGS PRIOR TO INSTALLATION.
2. EXTERIOR RECEPTACLE SHALL BE "WEATHER RESISTANT" TYPE AND LABELED ACCORDINGLY BY THE MANUFACTURER. WEATHER PROOF COVER SHALL BE PROVIDED THAT IS WEATHER PROOF WHILE IN USE. THE RECEPTACLE SHALL BE GFI TYPE.
3. WATER HEATER IS GAS AND BY OTHERS. PROVIDE CIRCUIT SHOWN FOR CONTROLS.
4. EXHAUST FANS TO BE INTERLOCKED WITH LIGHT FIXTURES AND CONTROLLED BY OCCUPANCY SENSOR SWITCH. SEE FAN INTERLOCK DETAIL THIS SHEET.
5. EXISTING UNIT. PROVIDE NEW CONDUIT AND FEEDER TO PANEL AS INDICATED.

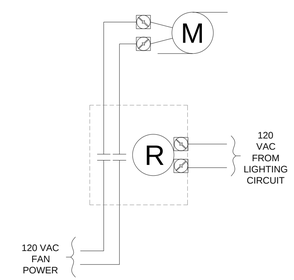


## FAN INTERLOCK DETAIL

NO SCALE

### MECHANICAL EQUIPMENT SCHEDULE

| EQUIPMENT NAME | VOLTAGE | PHASE | HP | KW | KW / POLE | FLA | MCA | MOCP | BREAKER AMPACITY | PANEL | FEEDER | DISCONNECT (NOTE 1) SIZE | POLES | FUSE SIZE | ENCLOSURE | CONTROL |
|---|---|---|---|---|---|---|---|---|---|---|---|---|---|---|---|---|
| F-1/F-2 | 120 | 1 | | 0.2 | 0.18 | | | | 20 | B-29 | 2 # 12 ,1# 12 G- 1/2 "C. | MOTOR RATED SWITCH | | | | BY DIVISION 16 |
| F-3 | 120 | 1 | | 0.2 | 0.16 | | | | 20 | B-31 | 2 # 12 ,1# 12 G- 1/2 "C. | MOTOR RATED SWITCH | | | | BY DIVISION 16 |
| WH-1 | 120 | 1 | | | 0.60 | 5.0 | | | 20 | A-25 | 2 # 12 ,1# 12 G- 1/2 "C. | MOTOR RATED SWITCH | | | | BY DIVISION 16 |
| RTU-1 (EXISTING) | 208 | 3 | | | 4.81 | 40.1 | 50.1 | 60 | 60 | A-1,3,5 | 3 # 4 ,1# 10 G- 1 "C. | 60 | 3 | NF | NEMA 3R | BY DIVISION 15 |
| RTU-2 (EXISTING) | 208 | 3 | | | 4.81 | 40.1 | 50.1 | 60 | 60 | A-7,9,11 | 3 # 4 ,1# 10 G- 1 "C. | 60 | 3 | NF | NEMA 3R | BY DIVISION 15 |

NOTES:

1. DISCONNECT SWITCH IS NOT REQUIRED IF UNIT IS PROVIDED WITH DISCONNECT OR IF UNIT HAS CORD/PLUG AND RECEPTACLE.

YOUR PIE

YOUR PIE
7309 KINGS MOUNTAIN PLACE.
SUITE 640
VESTAVIA, AL 35242

MEP CONTACT:JUSTIN R. HARDY, PE
5014 KINGSBRIDGE PASS
POWDER SPRINGS, GA
Phone: (678) 234-8156

ARCHITECT/ENGINEER STAMP

| REV. NO. | DATE | DESCRIPTION |
|---|---|---|
| 1 | 8/16/16 | PLANNING ENGINEERING AND REVIEWS |

PROJECT NO: 2015-1077
DRAWN BY: CC
CHECKED BY: TT
ISSUE DATE: 7-13-16

MECHANICAL FLOOR PLAN

E3.0

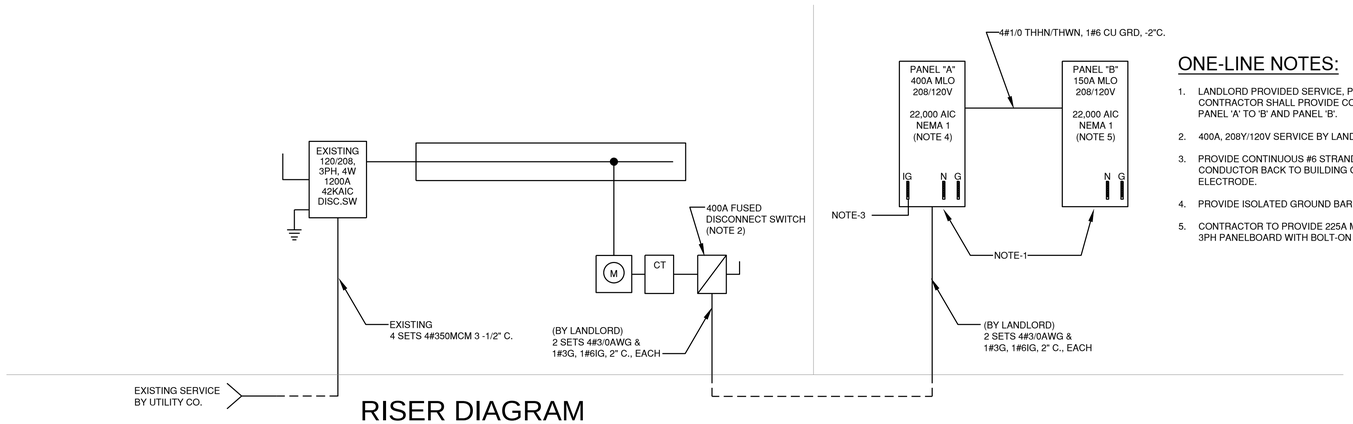


# RISER DIAGRAM

NO SCALE

## ONE-LINE NOTES:

1. LANDLORD PROVIDED SERVICE, PANEL'A', AND CONTRACTOR SHALL PROVIDE CONNECTION FROM PANEL 'A' TO 'B' AND PANEL 'B'.
2. 400A, 208Y/120V SERVICE BY LANDLORD.
3. PROVIDE CONTINUOUS #6 STRANDED COPPER CONDUCTOR BACK TO BUILDING GROUNDING ELECTRODE.
4. PROVIDE ISOLATED GROUND BAR IN PANELBOARD.
5. CONTRACTOR TO PROVIDE 225A MLO, COPPER BUS, 3PH PANELBOARD WITH BOLT-ON BREAKERS.

## LOAD SUMMARY

VOLTAGE: 208 Y/ 120V

| CIRCUIT DESCRIPTION | PANEL A | PANEL B | | CONNECTED | DEMAND |
|---|---|---|---|---|---|
| LIGHTING | 5.4 | 0.0 | | 5.39 | 6.74 |
| RECEPTACLE | 6.1 | 1.8 | | 7.90 | 7.90 |
| MOTOR | 1.0 | 0.7 | | 1.70 | 4.08 |
| HEATING | 0.0 | 0.0 | | 0.00 | 0.00 |
| COOLING | 28.9 | 0.0 | | 28.86 | 28.86 |
| KITCHEN | 0.0 | 17.3 | | 17.33 | 11.26 |
| | | | NEW TOTAL DIVERSIFIED KVA | | 59 |
| | | | NEW TOTAL DIVERSIFIED AMPS | | 163 |

PANEL NAME: A — LOCATION: BOH — VOLTAGE: 208 Y/ 120V 3 PHASE — 400A MLO — MOUNTING / ENCLOSURE: SURFACE / NEMA 1 — PANEL BY LANDLORD

| AMPS | POLES | TYPE | CIRCUIT DESCRIPTION | KVA | CKT | A | B | C | CKT | KVA | CIRCUIT DESCRIPTION | TYPE | POLES | AMPS |
|---|---|---|---|---|---|---|---|---|---|---|---|---|---|---|
| | | AC | | 4.81 | 1 | 4.96 | | | 2 | 0.15 | LIGHTING - PENDANTS | L | 1 | 20 |
| 60* | 3 | AC | RTU-1 | 4.81 | 3 | | 6.61 | | 4 | 1.80 | LIGHTING FOH TRACK | L | 1 | 20 |
| | | AC | | 4.81 | 5 | | | 5.05 | 6 | 0.24 | LIGHTING KITCHEN FRONT | L | 1 | 20 |
| | | AC | | 4.81 | 7 | 5.81 | | | 8 | 1.00 | LIGHTING RR, KITCHEN BACK | L | 1 | 20 |
| 60* | 3 | AC | RTU-2 | 4.81 | 9 | | 5.81 | | 10 | 1.00 | EXISTING EXTERIOR LIGHTING | L | 1 | 20 |
| | | AC | | 4.81 | 11 | | | 6.01 | 12 | 1.20 | EXTERIOR SIGN | L | 1 | 20 |
| 20** | 1 | R | TELEPHONE BACKBOARD | 0.36 | 13 | 1.36 | | | 14 | 1.00 | CEILING FANS | M | 1 | 20 |
| 20** | 1 | R | TELEPHONE BACKBOARD | 0.36 | 15 | | 0.36 | | 16 | | SPARE | | 1 | 20 |
| 20** | 1 | R | EXPO RECEP | 0.18 | 17 | | 0.18 | | 18 | | SPARE | | 1 | 20 |
| 20** | 1 | R | OFFICE RECEP | 0.36 | 19 | 0.72 | | | 20 | 0.36 | POS (39) | R | 1 | 20** |
| 20** | 1 | R | OFFICE RECEP | 0.36 | 21 | | 0.72 | | 22 | 0.36 | POS (39) | R | 1 | 20** |
| | 1 | | SPARE | | 23 | | | 0.54 | 24 | 0.54 | TELEVISIONS | R | 1 | 20** |
| 20 | 1 | R | WH-1 CONTROL | 0.60 | 25 | 1.14 | | | 26 | 0.54 | BOOTH RECEPTACLES | R | 1 | 20** |
| 20 | 1 | R | RECEPS CEILING FRONT | 0.72 | 27 | | 0.72 | | 28 | | SPARE | | 1 | 20 |
| 20 | 1 | R | TIME CLOCK CONTROL | 0.10 | 29 | | | 0.10 | 30 | | SPARE | | 1 | 20 |
| 20 | 1 | R | CONVENIENCE RECEP | 0.54 | 31 | 0.54 | | | 32 | | SPARE | | 1 | 20 |
| 20 | 1 | R | CONVENIENCE RECEP | 0.72 | 33 | | 0.72 | | 34 | | SPARE | | 1 | 20 |
| 20 | 1 | | SPARE | | 35 | | | | 36 | | SPARE | | 1 | 20** |
| 20 | 1 | | SPARE | | 37 | 7.24 | | | 38 | 7.24 | | | | |
| 20 | 1 | | SPARE | | 39 | | | 6.66 | 40 | 6.66 | PANEL B | 3 | 125 | |
| 20 | 1 | | SPARE | | 41 | 5.93 | | | 42 | 5.93 | | | | |
| | | | PHASE TOTAL | 27.7 | | 15.1 | 18.4 | | KVA | | | | | |

**PROVIDE ISOLATED GROUND
*PROVIDE HACR TYPE CIRCUIT BREAKER

| | | |
|---|---|---|
| TOTAL CONNECTED LOAD | 61 KVA | 170 A |
| TOTAL DEMAND LOAD | 63 KVA | 175 A |

PANEL NAME: B — LOCATION: BOH — VOLTAGE: 208 Y/ 120V 3 PHASE — 225A MLO — MOUNTING / ENCLOSURE: SURFACE / NEMA 1 — NEW PANEL BY CONTRACTOR

| AMPS | POLES | TYPE | CIRCUIT DESCRIPTION | KVA | CKT | A | B | C | CKT | KVA | CIRCUIT DESCRIPTION | TYPE | POLES | AMPS |
|---|---|---|---|---|---|---|---|---|---|---|---|---|---|---|
| 20 | 2 | K | REACH IN FREEZER (6) | 0.87 | 1 | 1.35 | | | 2 | 0.48 | PIZZA OVER (1) | K | 1 | 20** |
| | | K | | 0.87 | 3 | | 0.87 | | 4 | | SHUNT TRIP | | 1 | |
| 20 | 2 | K | WALK-IN COND (7C) | 0.87 | 5 | | | 1.23 | 6 | 0.36 | COKE DISPENSER (41) | K | 1 | 20 |
| | | K | | 0.87 | 7 | 1.23 | | | 8 | 0.36 | WALK-IN LIGHTS (7L) | K | 1 | 20 |
| 20 | 2 | K | GELATO CASE (20) | 0.30 | 9 | | 0.52 | | 10 | 0.22 | WALK-IN EVAP (7E) | K | 1 | 20 |
| | | K | | 0.30 | 11 | | | 0.92 | 12 | 0.62 | DROP-IN COLD PAN (10) | K | 1 | 20 |
| 20 | 2 | K | ICE MAKER (21) | 0.75 | 13 | 1.11 | | | 14 | 0.36 | COKE DISPENSER (41) | K | 1 | 20 |
| | | K | | 0.75 | 15 | | 1.37 | | 16 | 0.62 | DROP-IN COLD PAN (13) | K | 1 | 20 |
| 20 | 2 | K | ICE MAKER (21) | 0.75 | 17 | | | 1.51 | 18 | 0.76 | BAG-IN-BOX (17) | K | 1 | 20 |
| | | K | | 0.75 | 19 | 2.43 | | | 20 | 1.68 | TEA BREWER (48) | K | 1 | 20 |
| 20 | 1 | R | RESTROOMS RECEP | 0.36 | 21 | | 1.08 | | 22 | 0.72 | PASS THRU REF (26) | K | 1 | 20 |
| 20 | 1 | R | ROOF RECEPTACLES | 0.54 | 23 | | | 0.84 | 24 | 0.30 | SLICER (36) | K | 1 | 20 |
| 20 | 1 | K | BOTTLE COOLER (12) | 0.42 | 25 | 0.78 | | | 26 | 0.36 | HAND MIXER (37) | K | 1 | 20 |
| 20 | 1 | R | RECEPS KITCHEN | 0.54 | 27 | | 2.46 | | 28 | 1.92 | GRAB-IN-GO (38) | K | 1 | 20 |
| 20 | 1 | M | F-1/F-2 | 0.54 | 29 | | | 1.43 | 30 | 0.89 | BEER DISPENCER (40) | K | 1 | 20 |
| 20 | 1 | M | F-3 | 0.16 | 31 | 0.34 | | | 32 | 0.18 | DISH MACHINE (42) | K | 1 | 20 |
| 20 | 1 | R | WATER BOOSTER | 0.18 | 33 | | 0.36 | | 34 | 0.18 | RECEPTACLE AT PANELS | R | 1 | 20 |
| 20 | 1 | | SPARE | | 35 | | | | 36 | | SPARE | | 1 | 20 |
| 20 | 1 | | SPARE | | 37 | | | | 38 | | SPARE | | 1 | 20 |
| 20 | 1 | | SPARE | | 39 | | | | 40 | | SPARE | | 1 | 20 |
| 20 | 1 | | SPARE | | 41 | | | | 42 | | SPARE | | 1 | 20 |
| | | | PHASE TOTAL | 7.2 | | 6.7 | 5.9 | | KVA | | | | | |

**PROVIDE SHUNT TRIP BREAKER

| | | |
|---|---|---|
| TOTAL CONNECTED LOAD | 20 KVA | 55 A |
| TOTAL DEMAND LOAD | 14 KVA | 40 A |

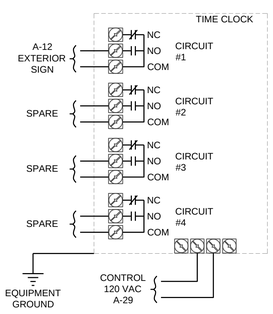


# TIME CLOCK DETAIL

NO SCALE

**COM*check* Software Version 4.0.2.3**

## Interior Lighting Compliance Certificate

### Project Information

Energy Code: 90.1 (2013) Standard
Project Title: Your Pie
Project Type: Alteration

Construction Site: 7309 Kings Mountain Place, Suite #640, Vestavia, AL 35242
Owner/Agent:
Designer/Contractor:

### Allowed Interior Lighting Power

| A Area Category | B Floor Area (ft2) | C Allowed Watts / ft2 | D Allowed Watts (B X C) |
|---|---|---|---|
| 1-Common Space Types:Dining Area - Family Restaurant | 3800 | 0.89 | 3382 |
| | | Total Allowed Watts = | 3382 |

### Proposed Interior Lighting Power

| A Fixture ID : Description / Lamp / Wattage Per Lamp / Ballast | B Lamps/ Fixture | C # of Fixtures | D Fixture Watt. | E (C X D) |
|---|---|---|---|---|
| Common Space Types:Dining Area - Family Restaurant (3800 sq.ft.) | | | | |
| LED 1: A, C: LED PAR 10W: | 1 | 20 | 10 | 200 |
| LED 3: D: LED PAR 12W: | 1 | 24 | 12 | 288 |
| Track lighting 1: A-4: Wattage based on circuit breaker capacity (20 amps x 120 volts) | 0 | 0 | 2400 | 2400 |
| LED 4: H: LED Panel 40W: | 1 | 8 | 40 | 320 |
| | | Total Proposed Watts = | | 3208 |

**Interior Lighting PASSES**

### Interior Lighting Compliance Statement

*Compliance Statement:* The proposed interior lighting alteration project represented in this document is consistent with the building plans, specifications, and other calculations submitted with this permit application. The proposed interior lighting systems have been designed to meet the 90.1 (2013) Standard requirements in COM*check* Version 4.0.2.3 and to comply with the mandatory requirements listed in the Inspection Checklist.

Andrew Lundy — Name - Title
Signature
8-25-2016 — Date

Project Title: Your Pie — Report date: 08/25/16
Data filename: P:\2016\2016-1163 YP Birmingham Liberty Park\Calculation\Electrical\YP Liberty.cck — Page 1 of 5

YOUR PIE

YOUR PIE
7309 KINGS MOUNTAIN PLACE.
SUITE 640
VESTAVIA, AL 35242

MEP CONTACT:JUSTIN R. HARDY, PE
5014 KINGSBRIDGE PASS
POWDER SPRINGS, GA
Phone: (678) 234-8156

ARCHITECT/ENGINEER STAMP

| REV. NO. | DATE | DESCRIPTION |
|---|---|---|
| 1 | 8/16/16 | PLANNING ENGINEERING / AHJ COMMENTS |

PROJECT NO: 2015-1077
DRAWN BY: CC
CHECKED BY: TT
ISSUE DATE: 7-13-16

SCHEDULES AND ONE-LINE

E4.0